HISTORY INFORMATION FOR THE FOLLOWING MANUAL:

SERVICE MANUAL

LA-3 CHASSIS

MODEL NAME	REMOTE COMMANDER	DESTINATION
KDF-42WE655	*RM-Y915*	*US/CND*
KDF-50WE655	*RM-Y915*	*US/CND*

ORIGINAL MANUAL ISSUE DATE: 9/2004

☛ :UPDATED ITEM

REVISION DATE	SUBJECT
9/2004	No revisions or updates are applicable at this time.
10/2004	Updated Block Diagram (Replaced Page 36 with Page 36)
	Updated PN for Power Supply Block, Added D.C. Fan (Sirocco) to Exploded View section (Replaced Page 77 with Page 77)
1/2005	Corrected Section 2-1. Setting the Service Adjustment Mode and 2-2. Service Adjustment Mode Memory (Replaced Page 28 with Page 28)
	Corrected Section 2-4. Remote Adjustment Buttons and Indicators (Replaced Page 29 with Page 29)
	Updated contact information for Service Data requests (Replaced Page 31 with Page 31)
	Updated contact information for Tiled Schematic requests (Replaced Last Page with Last Page)
1/2005	Added Caution statement (Replaced Page 6 with Page 6)
8/2005	Corrected location of LVDS Cables (Replaced Page 76 with Page 76)

LCD PROJECTION TELEVISION

SONY®

9-965-971-05

Self Diagnosis
Supported model

SERVICE MANUAL

LA-3 CHASSIS

MODEL NAME	REMOTE COMMANDER	DESTINATION
KDF-42WE655	RM-Y915	US/CND
KDF-50WE655	RM-Y915	US/CND

KDF-42WE655

RM-Y915

LCD PROJECTION TELEVISION

SONY®

9-965-971-05

TABLE OF CONTENTS

SECTION TITLE	PAGE
Specifications	4
Warnings and Cautions	6
Safety Check-Out	7
Self-Diagnostic Function	8
SECTION 1: DISASSEMBLY	**13**
1-1. Rear Cover Removal	13
1-2. Center Pillar Removal	13
1-3. Service Position	14
1-4. Fan and Chassis Assembly Removal	14
1-5. Power Supply Block Removal (Lamp Drive Unit)	15
1-6. Fan, RF Antenna Switch, and P Board Removal	15
1-7. U Board Removal	16
1-8. F Board and G1 Board Board Removal	16
1-9. A Board and KD Board Removal	17
1-10. Q Box Assembly, and B Board Removal	17
1-11. G2 Board Removal	18
1-12. T Board Removal	18
1-13. Woofer Removal	18
1-14. H3 Board Removal (KDF-42WE655 Only)	19
1-15. Front Cover Assembly Removal	19
1-15-1. Replacing the Lamp	19
1-16. HM Board Removal (KDF-42WE655 Only)	20
1-17. H3 Board and HM Board Removal (KDF-50WE655 Only)	20
1-18. H2 Board Removal	21
1-19. H1 Board Removal	21
1-20. Screen Mirror Block Assembly Removal	22
1-21. Mirror Cover Assembly and Speaker Removal	23
1-21-1. Diffusion plates (Screens) Tape Method	23
Wire Dressing	24
SECTION 2: CIRCUIT ADJUSTMENTS	**28**
2-1. Setting the Service Adjustment Mode	28
2-2. Service Adjustment Mode Memory	28
2-3. Memory Write Confirmation Method	29
2-4. Remote Adjustment Buttons and Indicators	29
2-5. H/V Center Confirmation and Adjustments	30
2-6. Service Data	31
2-7. ID Map Table	33

SECTION TITLE	PAGE
SECTION 3: DIAGRAMS	**34**
3-1. Circuit Boards Location	34
3-2. Printed Wiring Boards and Schematic Diagrams Information	34
3-3. Block Diagrams	36
3-4. Schematics and Supporting Information	37
A Board Schematic Diagram (1 of 3)	37
A Board Schematic Diagram (2 of 3)	38
A Board Schematic Diagram (3 of 3)	39
B Board Schematic Diagram (1 of 6)	42
B Board Schematic Diagram (2 of 6)	43
B Board Schematic Diagram (3 of 6)	44
B Board Schematic Diagram (4 of 6)	45
B Board Schematic Diagram (5 of 6)	46
B Board Schematic Diagram (6 of 6)	47
G2 Board Schematic Diagram (1 of 2)	50
G2 Board Schematic Diagram (2 of 2)	51
P Board Schematic Diagram	54
KD Board Schematic Diagram	55
G1 Board Schematic Diagram (1 of 2)	57
G1 Board Schematic Diagram (2 of 2)	58
F Board Schematic Diagram	61
HM Board Schematic Diagram	63
H1 Board Schematic Diagram	65
H2 Board Schematic Diagram	67
H3 Board Schematic Diagram	68
T Board Schematic Diagram	69
U Board Schematic Diagram	70
3-5. Semiconductors	72
SECTION 4: EXPLODED VIEWS	**73**
4-1. Cover	73
4-2. Bottom Cabinet (KDF-42WE655 Only)	74
4-3. Bottom Cabinet (KDF-50WE655 Only)	75
4-4. Chassis	76
4-5. Optical Unit Block	77
SECTION 5: ELECTRICAL PARTS LIST	**78**

SPECIFICATIONS

Power Requirements 120V AC, 60Hz
Power Consumption (W) 230W
In Use (Max) Under 20W
In Standby
Inputs/Outputs

HDMI IN
Video - 1080i, 720p, 480p, 480i
Audio - Two channel linear PCM 32, 44.1 and 48 kHz, 16, 20, and 24 bit

Video (IN)
4 total (1 on front panel)
1Vp-p, 75ohms unbalanced, sync negative

S Video (IN)
4 total (1 on front panel)
Y: 1Vp-p, 75ohms unbalanced, sync negative
C: 0.286Vp-p (Burst signal), 75ohms

Audio (IN)
7 total (1 on front panel)
500 mVrms (100% modulation)
Impedance:47 kilo ohms

Audio (VAR/FIX) Out
1 total
500 mVrms at the maximum volume setting (Variable)
500 mVrms (Fixed)
Impedance (Output):2 kilo ohm
Note: Audio Out jacks are operable only when the TV's speaker is set to Off.

Control S (IN)
1 total
Minijack

Control S (OUT)
1 total
Minijack

Component Video Input
2 (Y, P_B, P_R)
Y: 1.0 Vp-p, 75 ohms unbalanced, sync negative
P_B: 0.7 Vp-p, 75 ohms;
P_R: 0.7 Vp-p, 75 ohms

RF Inputs
2 total

Digital Audio Optical Output (PCM/Dolby Digital)
1 total
Optical Rectangular (1)

CableCARD Slot
1 total
PCMCIA Type I/II

	KDF-42WE655	KDF-50WE655
Speaker Output (W)	5W x 2	
Woofer	20W	
Dimensions (W x H x D)		
mm	1,200 x 818 x 314 mm	1,376 x 927.2 x 379 mm
in	47 1/4 x 32 1/4 x 12 1/3 in	54 1/8 x 36 1/2 x 15 in
Mass		
kg	32.5 kg	39 kg
lbs	71 lbs 10 oz	85 lbs 14 oz

CableCARD™ is a trademark of Cable Television Laboratories, Inc.

TruSurround, SRS and the (●)® symbol are trademarks of SRS Labs, Inc.
TruSurround technology is incorporated under license from SRS Labs, Inc.
BBE and BBE Symbol are trademarks of BBE Sound, Inc. and are licensed by BBE Sound, Inc. under U.S. Patent No. 4,638,258 and 4,482,866.

DOLBY DIGITAL

Manufactured under license from Dolby Laboratories Licensing Corporation. Dolby and the double-D symbol are trademarks of Dolby Laboratories Licensing Corporation.

HDMI

This TV incorporates High-Definition Multimedia Interface (HDMI™) technology. HDMI, the HDMI logo and High-Definition Multimedia Interface are trademarks or registered trademarks of HDMI Licensing LLC.

WEGA, Steady Sound, Digital Reality Creation, CineMotion, Memory Stick, Memory Stick Duo, Memory Stick PRO, Memory Stick PRO Duo, MagicGate, MID and Twin View are trademarks of Sony Corporation.

Design and specifications are subject to change without notice.

Television system

American TV standard, NTSC
ATSC compliant 8VSB, ATSC (8VSB terrestrial)
ANSI/SCTE 07 2000 QAM on cable

Channel coverage

Terrestrial 2-69/ Cable TV: 1-125 (analog)
Terrestrial: 2-69/ Cable TV: 1-135 (digital)

Screen Size (measured diagonally)

42 inches (KDF-42WE655 Only)
50 inches (KDF-50WE655 Only)

Antenna

75-ohm external antenna terminal for VHF/UHF

Projection System

3 LCD Panels, 1 lens projection system

LCD Panel

0.87 inch TFT LCD panel Approx. 3.28 million dots
(1,042,168 pixels)

Projection Lens

High Performance, large diameter hybrid lens F2.4

Lamp

UHP lamp, 100W XL-2100 or XL2100U

Supplied Accessories

Remote Commander RM-Y915
Two Size AA (R6) Batteries

WARNINGS AND CAUTIONS

CAUTION

☛ These servicing instructions are for use by qualified service personnel only. To reduce the risk of electric shock, do not perform any servicing other than that contained in the operating instructions unless you are qualified to do so.

WARNING!!

An isolation transformer should be used during any service to avoid possible shock hazard, because of live chassis. The chassis of this receiver is directly connected to the ac power line.

⚠ SAFETY-RELATED COMPONENT WARNING!!

Components identified by shading and ⚠ mark on the schematic diagrams, exploded views, and in the parts list are critical for safe operation. Replace these components with Sony parts whose part numbers appear as shown in this manual or in supplements published by Sony. Circuit adjustments that are critical for safe operation are identified in this manual. Follow these procedures whenever critical components are replaced or improper operation is suspected.

ATTENTION!!

☛ Ces instructions de service sont à l'usage du personnel de service qualifié seulement. Pour prévenir le risque de choc électrique, ne pas faire l'entretien autre que celui contenu dans le Mode d'emploi à moins que vous soyez qualifié faire ainsi.

Afin d'eviter tout risque d'electrocution provenant d'un châssis sous tension, un transformateur d'isolement doit etre utilisé lors de tout dépannage. Le châssis de ce récepteur est directement raccordé à l'alimentation du secteur.

⚠ ATTENTION AUX COMPOSANTS RELATIFS A LA SECURITE!!

Les composants identifies par une trame et par une marque ⚠ sur les schemas de principe, les vues explosees et les listes de pieces sont d'une importance critique pour la securite du fonctionnement. Ne les remplacer que par des composants Sony dont le numero de piece est indique dans le present manuel ou dans des supplements publies par Sony. Les reglages de circuit dont l'importance est critique pour la securite du fonctionnement sont identifies dans le present manuel. Suivre ces procedures lors de chaque remplacement de composants critiques, ou lorsqu'un mauvais fonctionnement suspecte.

SAFETY CHECK-OUT

After correcting the original service problem, perform the following safety checks before releasing the set to the customer:

1. Check the area of your repair for unsoldered or poorly soldered connections. Check the entire board surface for solder splashes and bridges.

2. Check the interboard wiring to ensure that no wires are “pinched” or touching high-wattage resistors.

3. Check that all control knobs, shields, covers, ground straps, and mounting hardware have been replaced. Be absolutely certain that you have replaced all the insulators.

4. Look for unauthorized replacement parts, particularly transistors, that were installed during a previous repair. Point them out to the customer and recommend their replacement.

5. Look for parts which, though functioning, show obvious signs of deterioration. Point them out to the customer and recommend their replacement.

6. Check the line cords for cracks and abrasion. Recommend the replacement of any such line cord to the customer.

7. Check the B+ and HV to see if they are specified values. Make sure your instruments are accurate; be suspicious of your HV meter if sets always have low HV.

8. Check the antenna terminals, metal trim, “metallized” knobs, screws, and all other exposed metal parts for AC leakage. Check leakage as described below.

Leakage Test

The AC leakage from any exposed metal part to earth ground and from all exposed metal parts to any exposed metal part having a return to chassis, must not exceed 0.5 mA (500 microamperes). Leakage current can be measured by any one of three methods.

1. A commercial leakage tester, such as the Simpson 229 or RCA WT-540A. Follow the manufacturers’ instructions to use these instructions.

2. A battery-operated AC milliampmeter. The Data Precision 245 digital multimeter is suitable for this job.

3. Measuring the voltage drop across a resistor by means of a VOM or battery-operated AC voltmeter. The “limit” indication is 0.75 V, so analog meters must have an accurate low voltage scale. The Simpson’s 250 and Sanwa SH-63TRD are examples of passive VOMs that are suitable. Nearly all battery-operated digital multimeters that have a 2 VAC range are suitable (see Figure A).

How to Find a Good Earth Ground

A cold-water pipe is a guaranteed earth ground; the cover-plate retaining screw on most AC outlet boxes is also at earth ground. If the retaining screw is to be used as your earth ground, verify that it is at ground by measuring the resistance between it and a cold-water pipe with an ohmmeter. The reading should be zero ohms.

If a cold-water pipe is not accessible, connect a 60- to 100-watt trouble- light (not a neon lamp) between the hot side of the receptacle and the retaining screw. Try both slots, if necessary, to locate the hot side on the line; the lamp should light at normal brilliance if the screw is at ground potential (see Figure B).

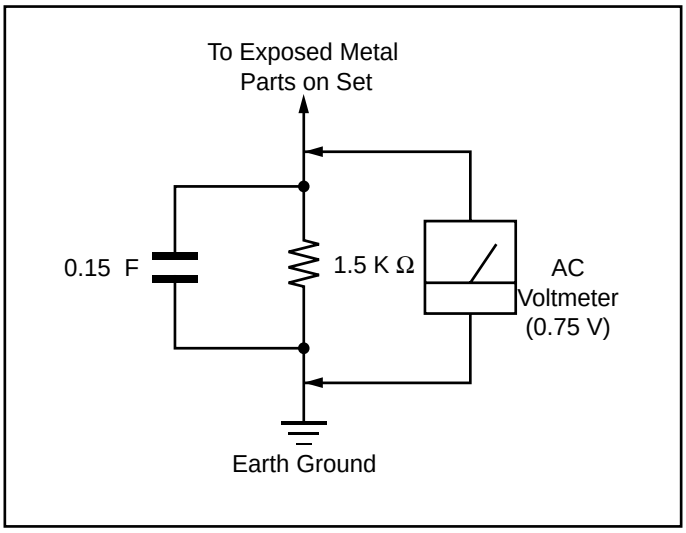

Figure A. Using an AC voltmeter to check AC leakage.

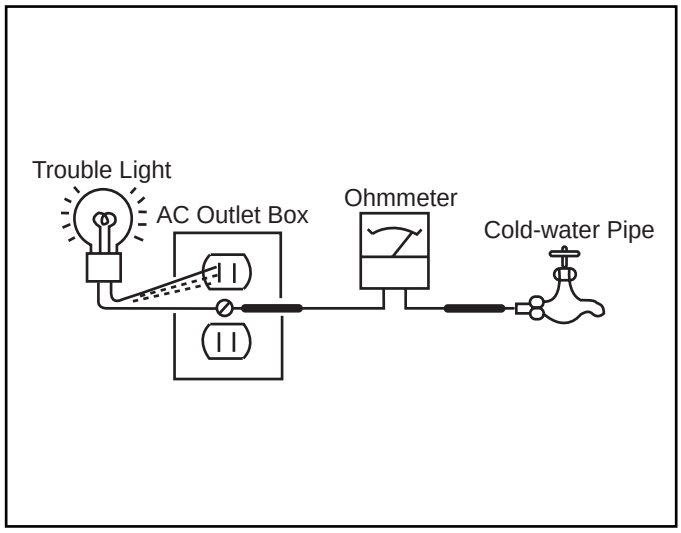

Figure B. Checking for earth ground.

SELF-DIAGNOSTIC FUNCTION

Self Diagnosis Supported model

The units in this manual contain a self-diagnostic function. If an error occurs, the POWER/STANDBY or LAMP LED will automatically begin to flash. The number of times the LED flashes translates to a probable source of the problem. A definition of the POWER/STANDBY or LAMP LED flash indicators is listed in the instruction manual for the user's knowledge and reference. If an error symptom is difficult to reproduced use the Remote Commander to display the record that is stored at the internal NVM to specify the cause of the failure.

Diagnostic Test Indicators

When an error occurs, the POWER/STANDBY or LAMP LED will flash a set number of times to indicate the possible cause of the problem. If there is more than one error, the LED will identify the first of the problem areas. If the errors occur simultaneously, the one that corresponds to the fewest flashes is identified first.

Results for all of the following diagnostic items are displayed on screen. No error has occurred if the screen displays a "0".

Diagnostic Item Description	Number of times STANDBY or LAMP LED lamp flashes	Probable Cause	Detected Symptoms
Lamp cover error	3 times	- Lamp cover is not fastened securely	- No picture/No sound
Fan error	4 times	- Fan1-4 Power is not supplied.(G2 board) - Fan connector is not seated securely - Fan caught wires or harnesses	- No picture/No sound
Temp error	4 times	- Internal temperature is too high - IIC-E line connector is not seated properly (WE:H3 board, WF/XS:H4 board)	- No picture/No sound
Lamp driver error	5 times	- Lamp driver defect	- No picture/No sound
Low B error	6 times	-No "DD 6V " output (G1 board)	- No picture/No sound
Audio error	7 times	- Short-circuit of Audio power supply line (KD board, G1 board) - Blowout of a fuse (F4702,F4703,F4704 on KD board) - IC failure (IC4703,IC4708,IC4710 on KD board)	- No picture/No sound
D-OVP error	8 times	- Overvoltage of +3.3V or +2.5V (A board, B board)	- No picture/No sound
ATSC-OVP error	10 times	-No "DTL MODULE 5V " output (G1 board, G2 board)	- No picture/No sound
Lamp error	LAMP-LED is ON.	- Lamp is dead	- No picture/No sound

Display of POWER/STANDBY or LAMP LED Flash Count

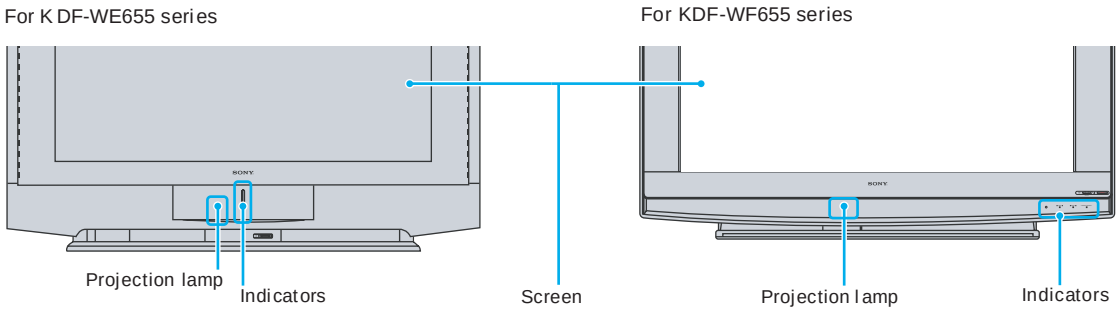

- One flash is not used for self-diagnosis

- Example

Diagnosis	Number of times LED Flash
Lamp cover	3 times
Fan	4 times

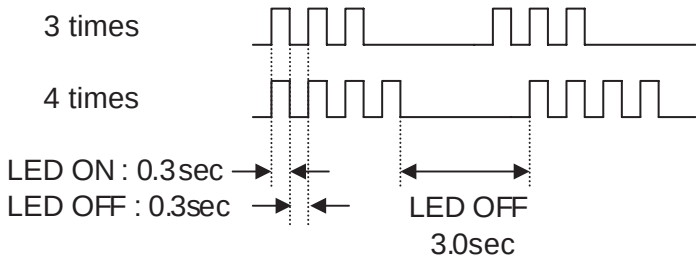

Releasing the POWER/STANDBY LED Flash
Unplug the power cord from the outlet to temporarily stop the POWER/STANDBY lamp from flashing.

Self-Diagnosis Screen Display
For failures that are difficult to reproduce, or accompany occasional power off and/or picture mute, the Self-Diagnosis screen display is useful to specify the cause..

To Bring Up Screen Test
In standby mode, press the buttons on the Remote Commander sequentially, in rapid succession, as shown below:

1. Display ➡ Channel 5 ➡ Sound Volume - ➡ Power ON

Self-Diagnostic Screen Display

SELF CHECK

1	:	LAMP ERR	0
3	:	LAMP COVER	0
4	:	FAN-E/TEMP-E	1
5	:	LAMP DRIVER	0
6	:	LowB-ERR	0
7	:	Audio-Prot	1
8	:	D-OVP	0
10	:	ATSC_OVP	0
101	:	WDT	0

"1" is displayed when a failure is detected one or more times
"0" is displayed when no failure has been detected

Since the diagnostic results displayed on the screen are not automatically cleared, always check the self-diagnostic screen during repairs. When you have completed the repairs, clear the result display to “0”.

Note: The self-diagnostic function will not be able to detect any subsequent faults after completion of the repairs unless the result display is cleared to “0”.

cleared to “0”.

Clearing the Result Display

To clear the result display to “0”, press the buttons on the Remote Commander sequentially when the diagnostic screen is displayed, as shown below:

1. If the screen is already displayed, proceed to step 3. If not, Power off (Set to Standby model).
2. Press [Display] ➡ Channel [5] ➡ Sound Volume [-] ➡ Power ON
3. Press Channel [8] ➡ [ENTER]

Clearing the Self-Diagnostic Screen

The self diagnosis screen display is cleared by turning off the set using the Remote Commander or the power switch.

Self-Diagnostic Circuit

Self-Diagnosis Function Operation

3	:	Lamp cover	The rib at the back of the lamp cover closes the SW on the T board to ground pin 3 of CN8001. It is monitored by the DE-micro (pin 94 of IC6902) and turns off the lamp when it is opened.
4	:	Fan	Fan rotation is detected by "FAN-PROT" and the DE-micro (pin 92 of IC6902) turns off the lamp when it is "high".
4	:	Temp	When the temperature sensor on the H3 board (WE models) or H4 board (WF/XS models) detects high temperature, or IIC-E line connector (CN6022:G2 board, CN44:H3board/H4board) is not seated securely, the DE-micro turns off the lamp.
5	:	Lamp driver	When the "LAMP-PROT" (pin 95) is low, the lamp is not turned on. If the "LAMP-HV-DET" (pin 96) is low at the same time, it is classified as no high voltage of the lamp driver.
6	:	Low B error	When no "DD 6V " is detected, pin 129 of TV-micro is low and it turns off the main power.
7	:	Audio	When DC voltage is detected at the speaker or woofer outputs, pin 128 of TV-micro is low and it turns off the main power.
8	:	D-OVP	When overvoltage of "+3.3V" or "+2.5V" is detected, pin 126 of TV-micro is low and it turns off the main power.
10	:	ATSC-OVP	When no "Digital Module 5V" is detected, pin 127 of TV-micro is low and it turns off the main power.
LAMP	:	Lamp	When the Lamp Prot IC6902/pin 95 which is normally at (0v) goes high (5v), it goes into Lamp protect mode and the lamp turns off." If the "LAMP-HV-DET" IC6902/pin 96 (normally at 3v) goes low (0v) at the same time, it is classified as no high voltage of the lamp driver.

Self-Diagnosis Block Diagram

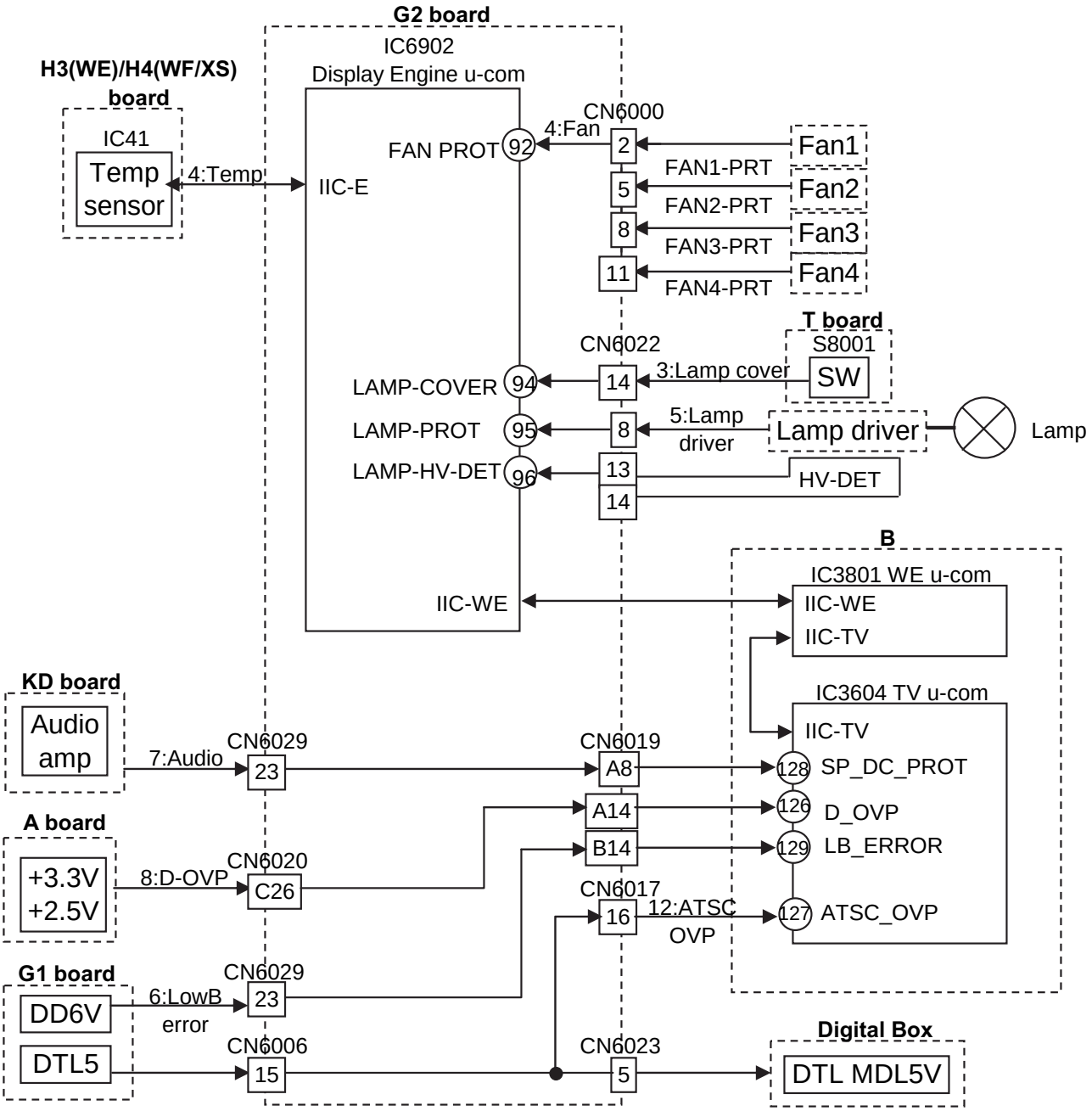

Reading Lamp and Panel time

Use the following to determine the lamp and panel time of a set.

Screen Display Method

In standby mode, press the buttons on the Remote Commander sequentially, in rapid succession, as shown below:

1. Press [Display] ➡ Channel [5] ➡ Sound Volume [+] ➡ Power ON
2. To enter the DE-micro service menu, press [Jump] 3 times.
3. To display the Lamp time, press Channel [2] 9 times.

example

```
PANEL        NVM  OK    9  OPTION_E
 0  LAMP             0  Diff        1
LampTM        14   LampCT       71
```

The screen displays:

"Total lamp time is 14 hours" and "Total lamp ON/OFF cycle is 71 times"

To reset the lamp time press Channel [3] ➡ [Mute] ➡ [Enter].

WRI-EXE(Character color is Red) is momemtarily displayed and LampTM is reset to "0".

4. To display the Panel time, press Channel [1] 7 times

example

```
PANEL        NVM  OK    9  OPTION_E
 7  SH  SFT1         10  Diff        1
PanelTM       14h
```

The screen displays:

"Total Panel time is 14 hours"

NOTE: You cannot reset the Panel time with the Service menu.

Exiting Service Mode

After completing the changes exit service mode by turning off the set using the Remote Commander or the power switch.

SECTION 1: DISASSEMBLY

1-1. REAR COVER REMOVAL

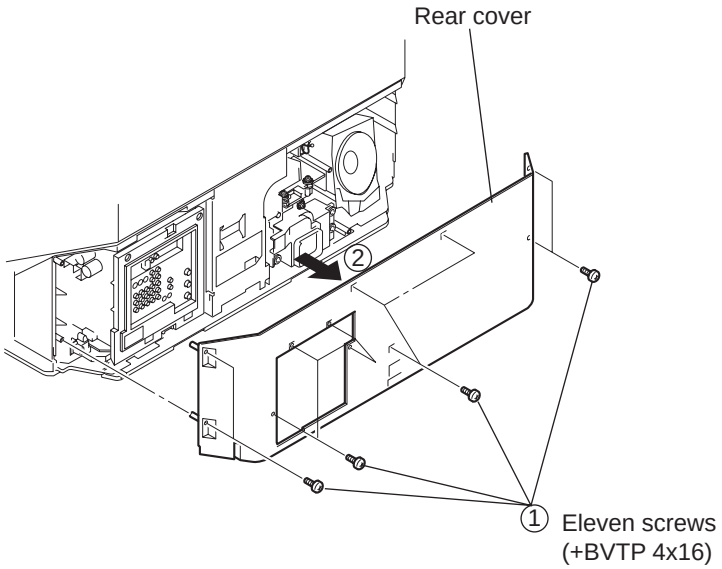

1-2. CENTER PILLAR REMOVAL

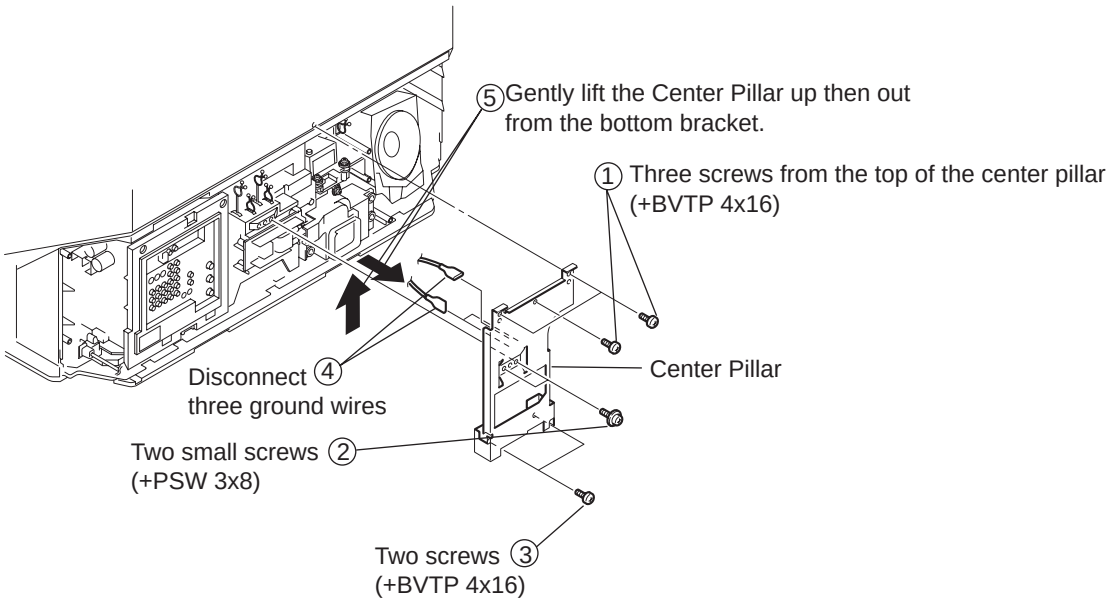

1-3. SERVICE POSITION

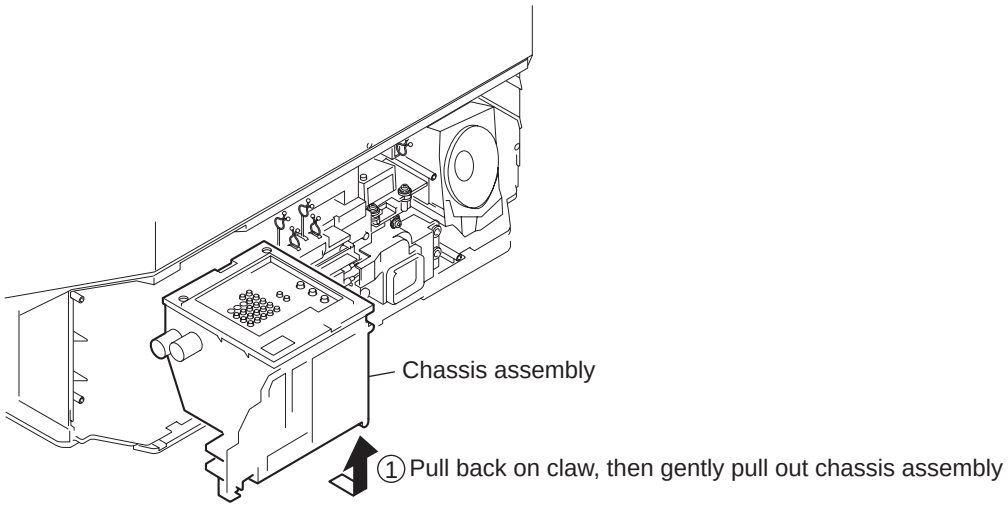

1-4. FAN AND CHASSIS ASSEMBLY REMOVAL

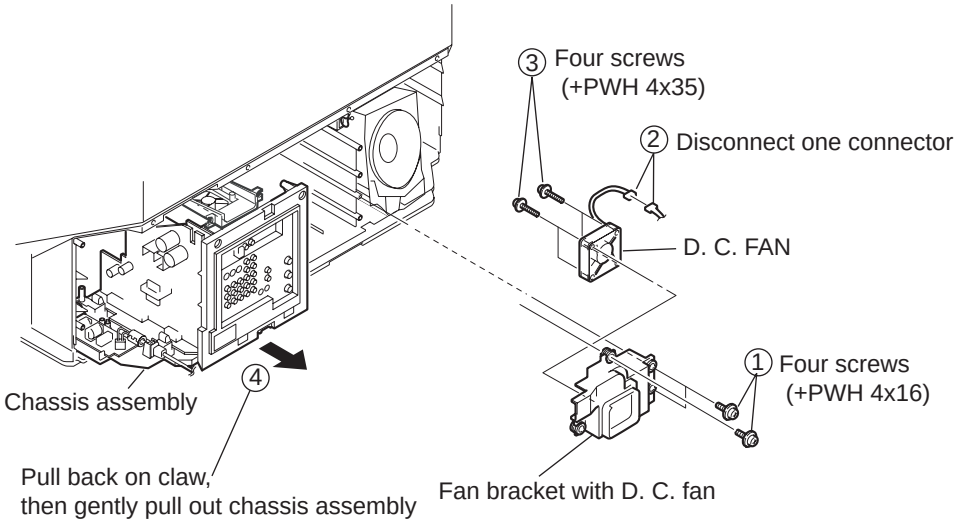

1-5. POWER SUPPLY BLOCK REMOVAL (LAMP DRIVE UNIT)

CAUTION: When removing the Power Supply Block be careful not to move the Optical Unit Block

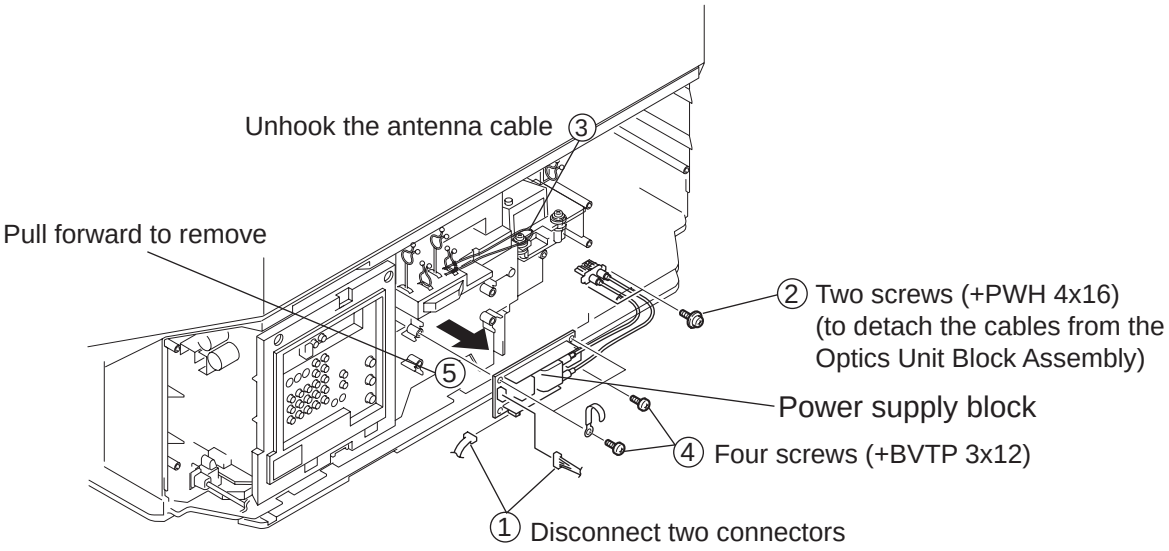

1-6. FAN, RF ANTENNA SWITCH, AND P BOARD REMOVAL

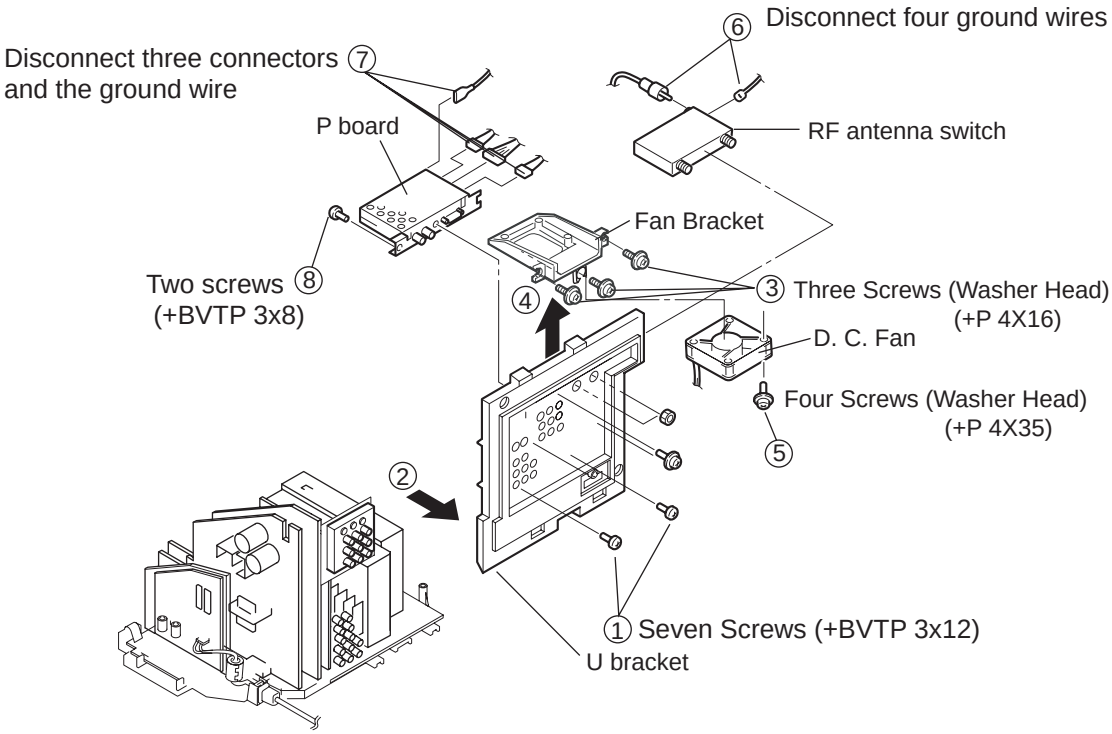

1-7. U BOARD REMOVAL

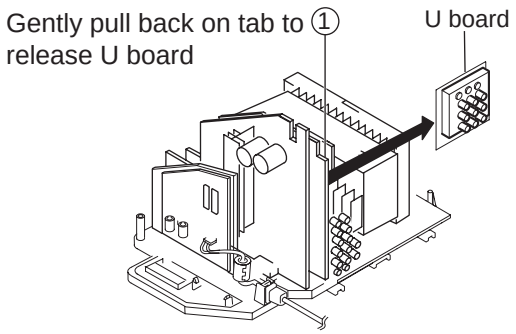

1-8. F BOARD AND G1 BOARD BOARD REMOVAL

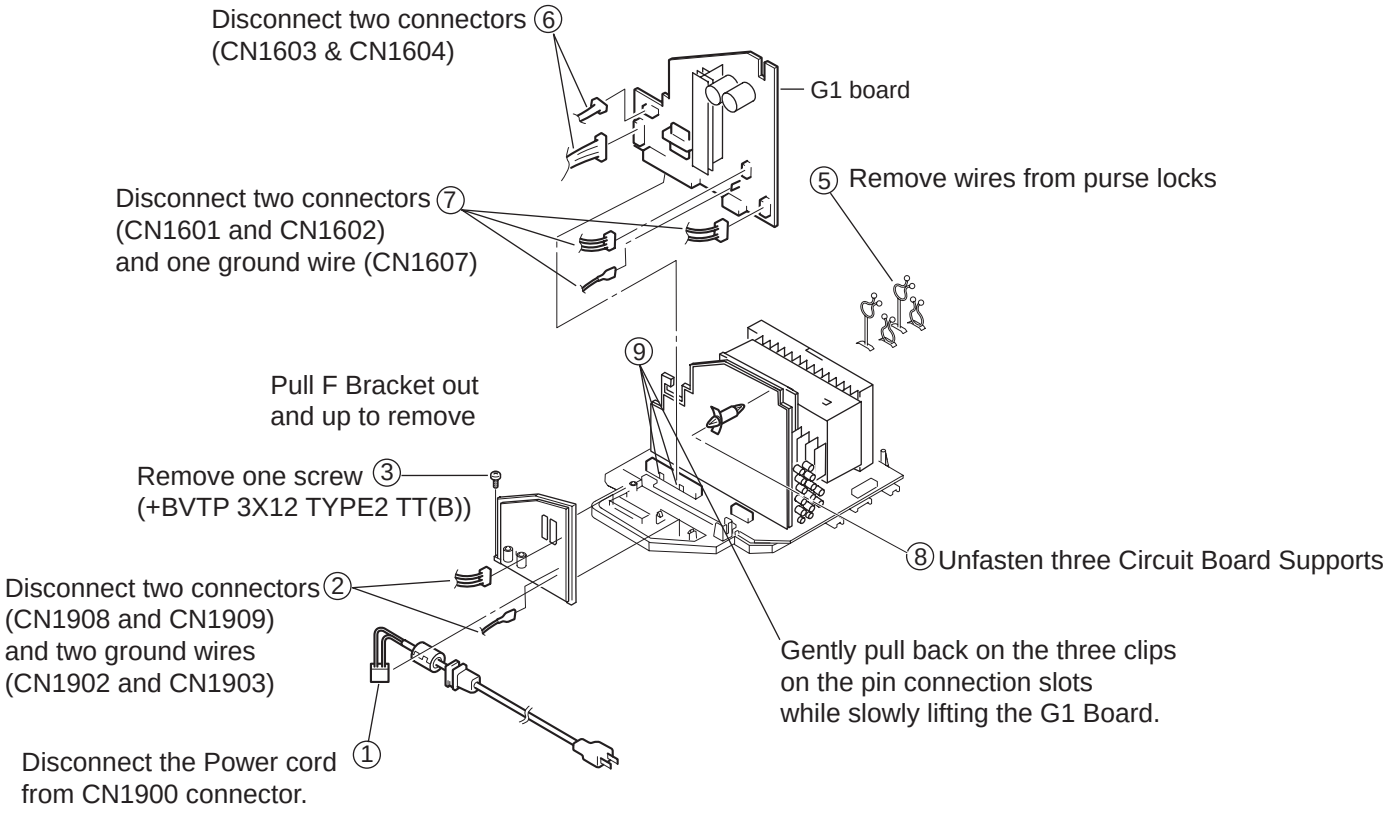

1-9. A BOARD AND KD BOARD REMOVAL

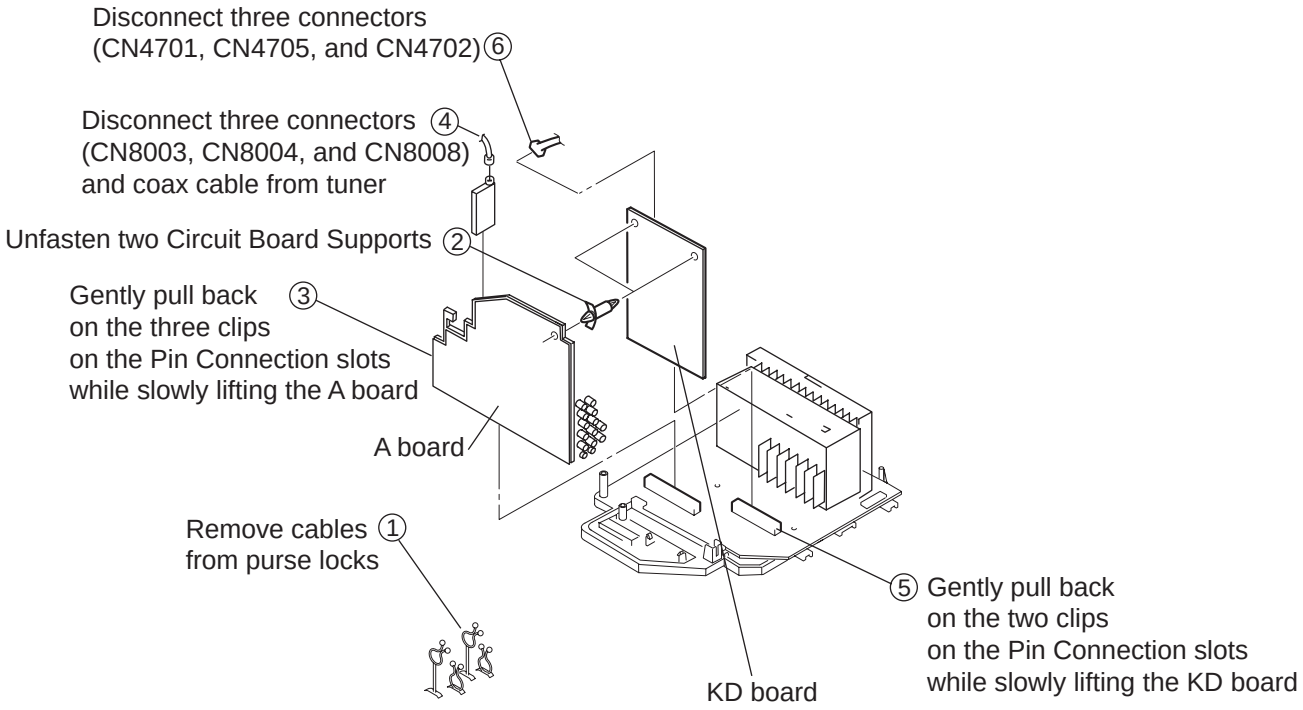

1-10. Q BOX ASSEMBLY, AND B BOARD REMOVAL

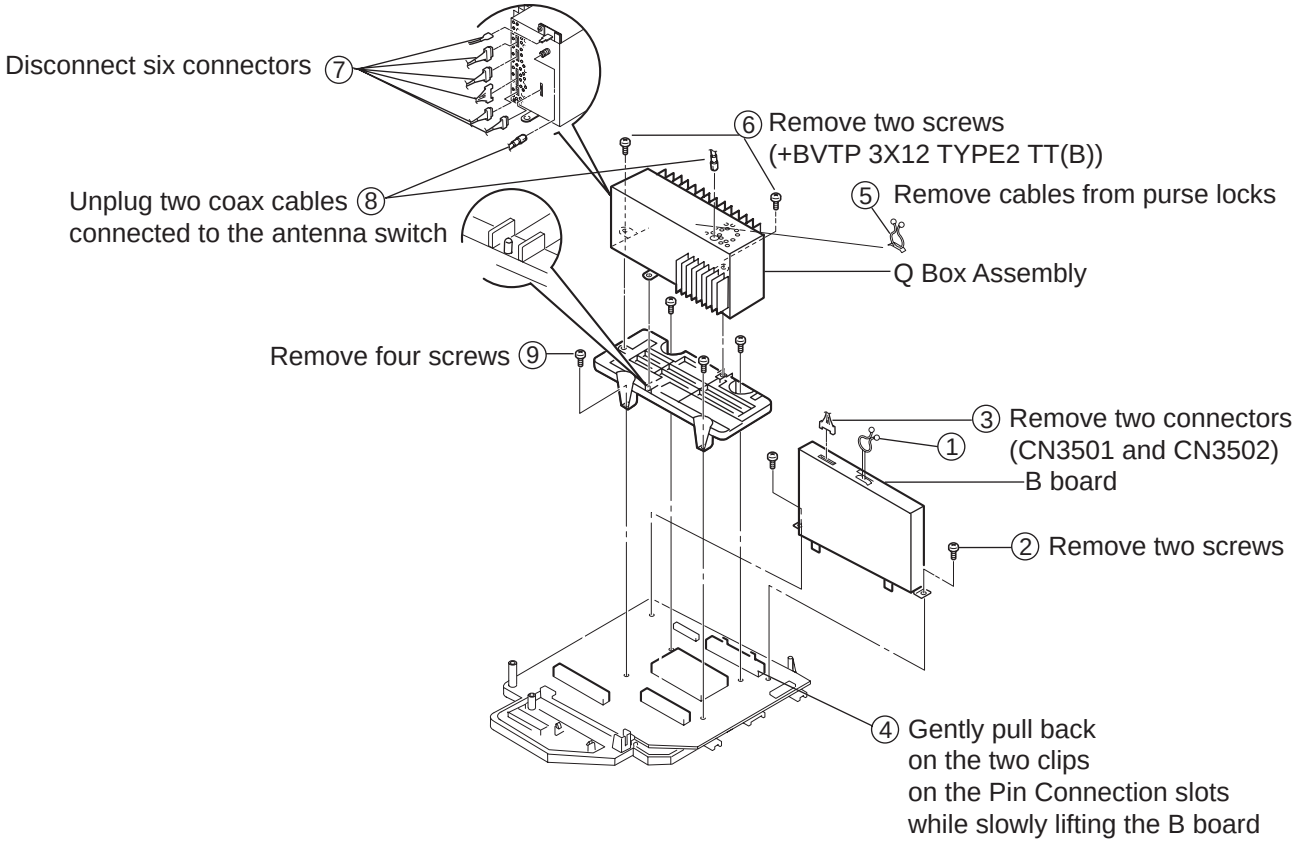

1-11. G2 BOARD REMOVAL

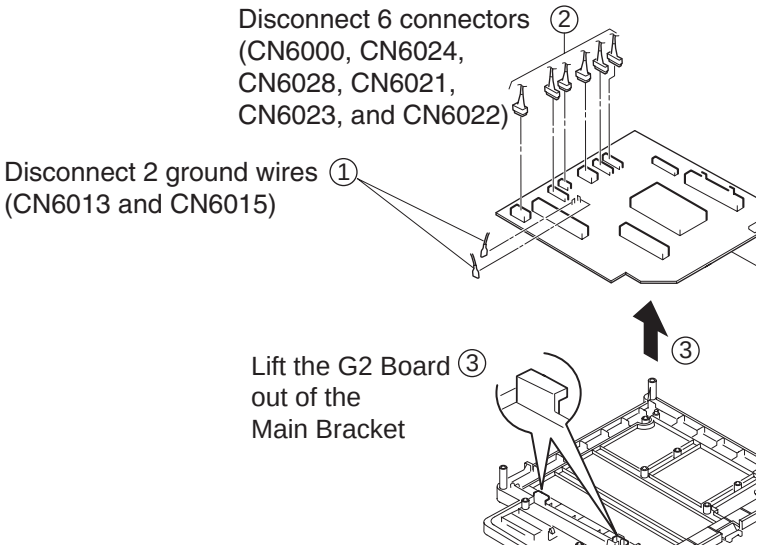

1-12. T BOARD REMOVAL

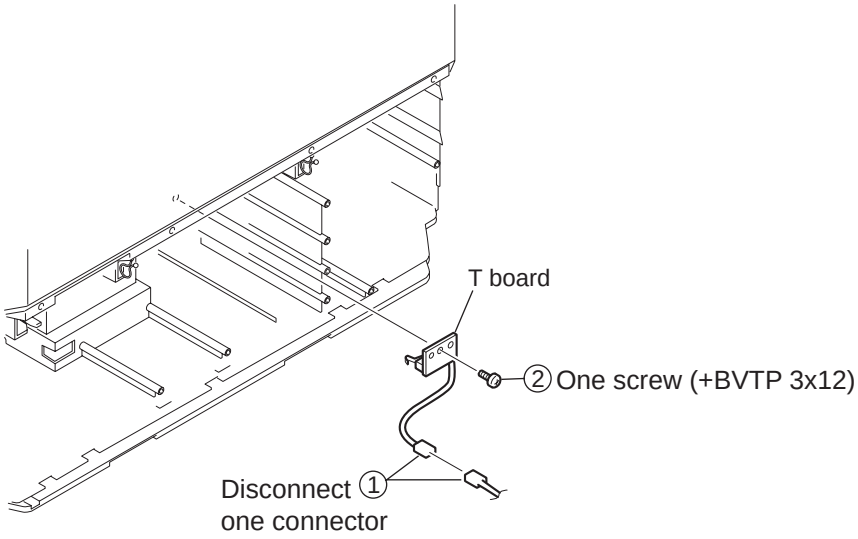

1-13. WOOFER REMOVAL

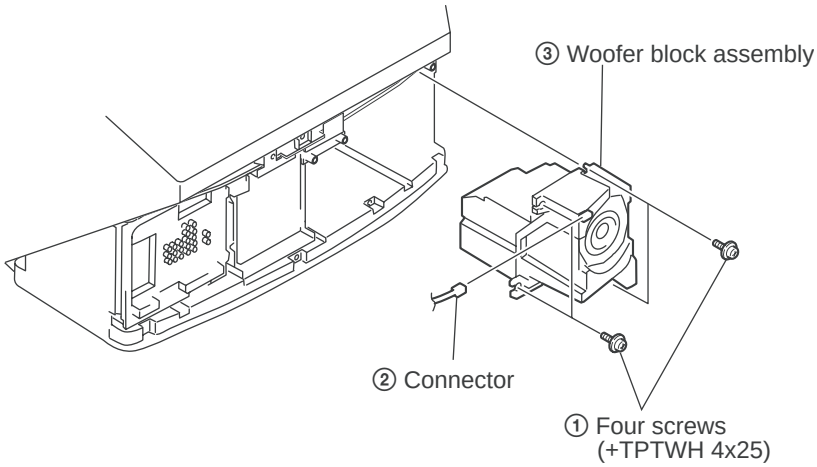

1-14. H3 BOARD REMOVAL (KDF-42WE655 ONLY)

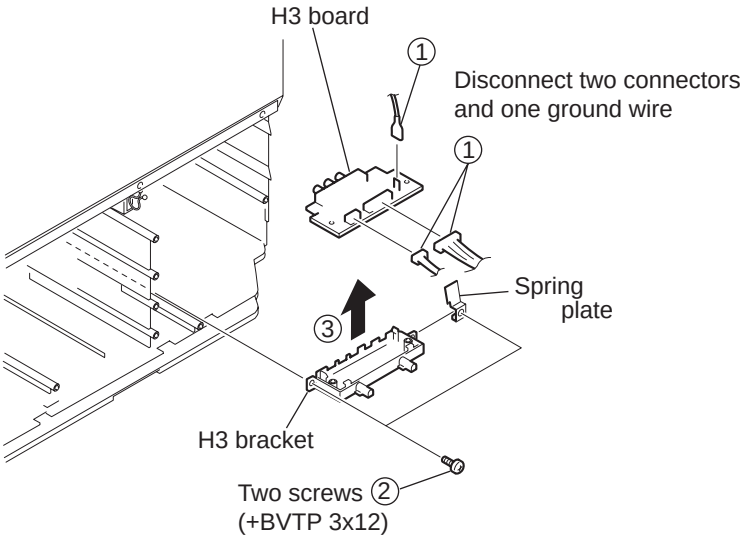

1-15. FRONT COVER ASSEMBLY REMOVAL

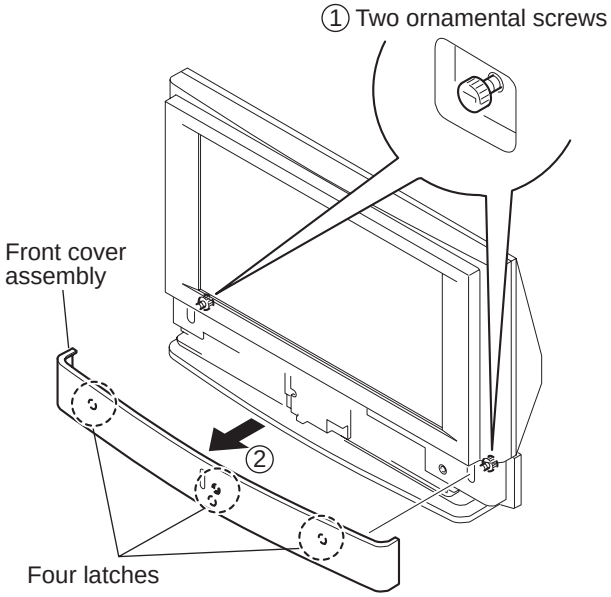

1-15-1.REPLACING THE LAMP

For detailed instructions on replacing the lamp, see Page 16 of the Operating Instructions manual.

1-16. HM BOARD REMOVAL (KDF-42WE655 ONLY)

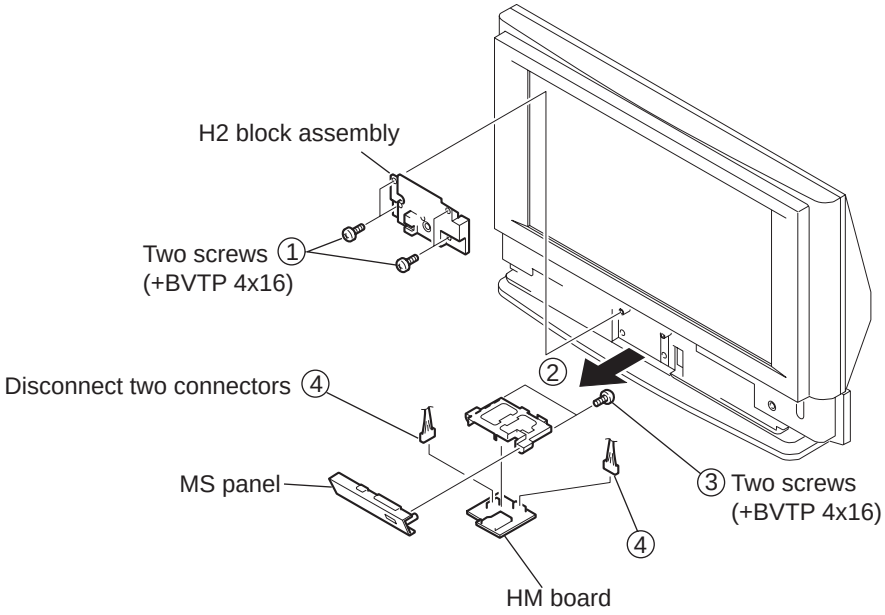

1-17. H3 BOARD AND HM BOARD REMOVAL (KDF-50WE655 ONLY)

Note:
To remove the HM Board you need to remove the screws inside the Bottom Cabinet Assembly

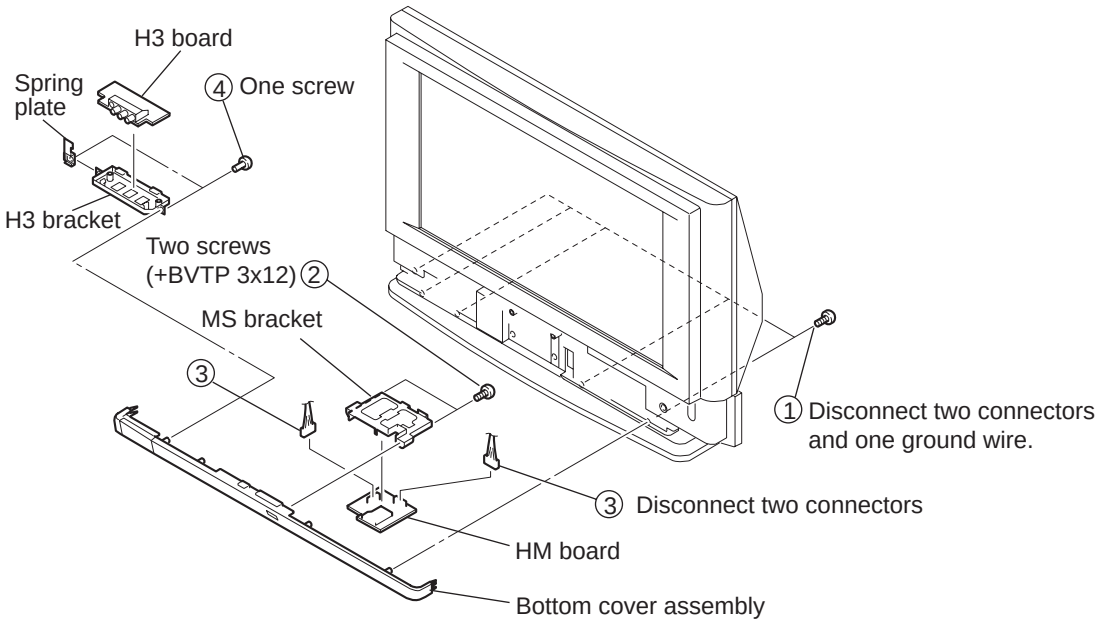

1-18. H2 BOARD REMOVAL

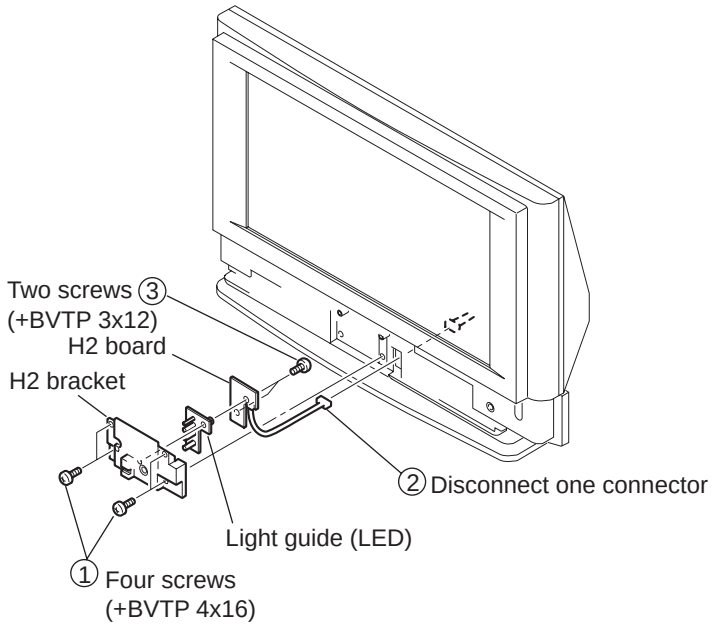

1-19. H1 BOARD REMOVAL

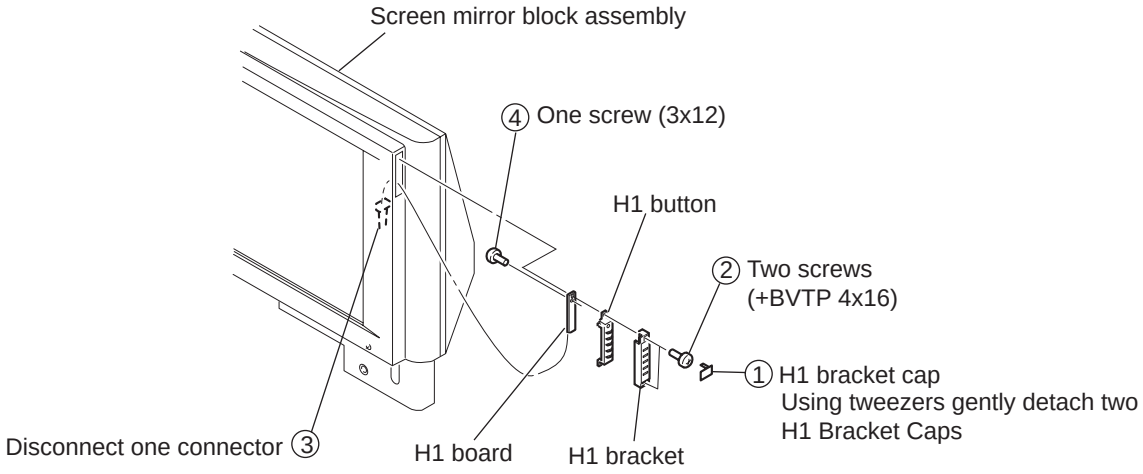

1-20. SCREEN MIRROR BLOCK ASSEMBLY REMOVAL

Caution:
When repairing anything inside the Screen Mirror Block Assembly be sure to clean the mirror and Diffusion Plate to remove any dust particles.

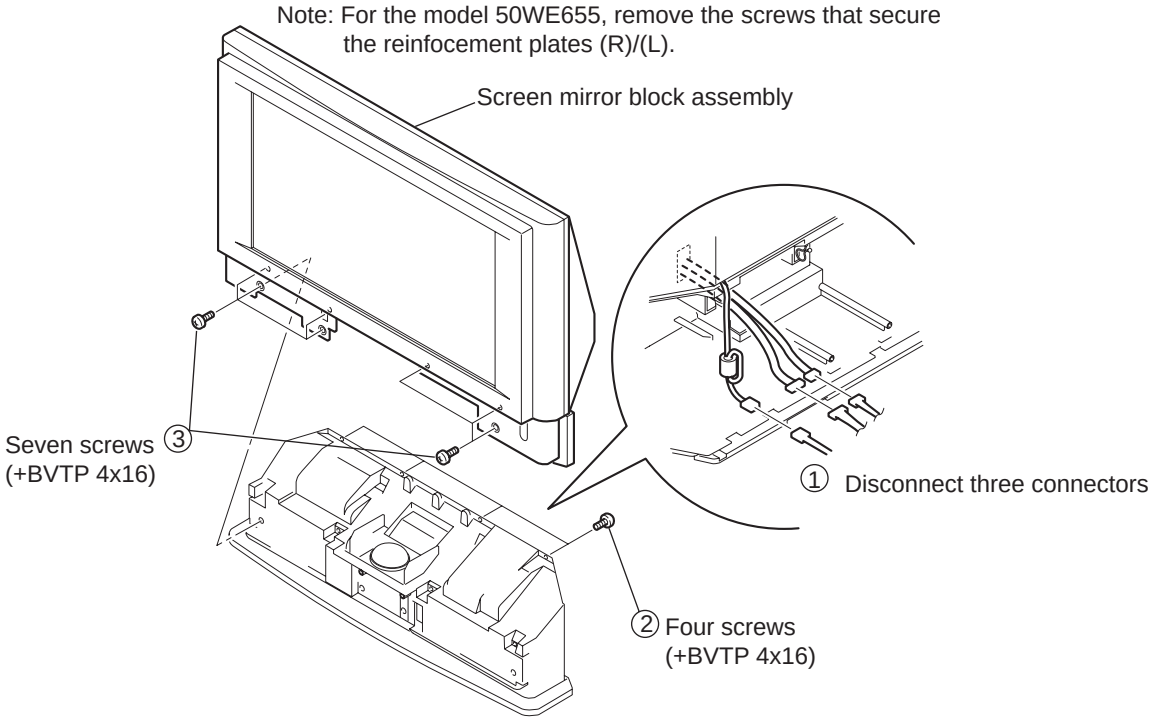

1-21. MIRROR COVER ASSEMBLY AND SPEAKER REMOVAL

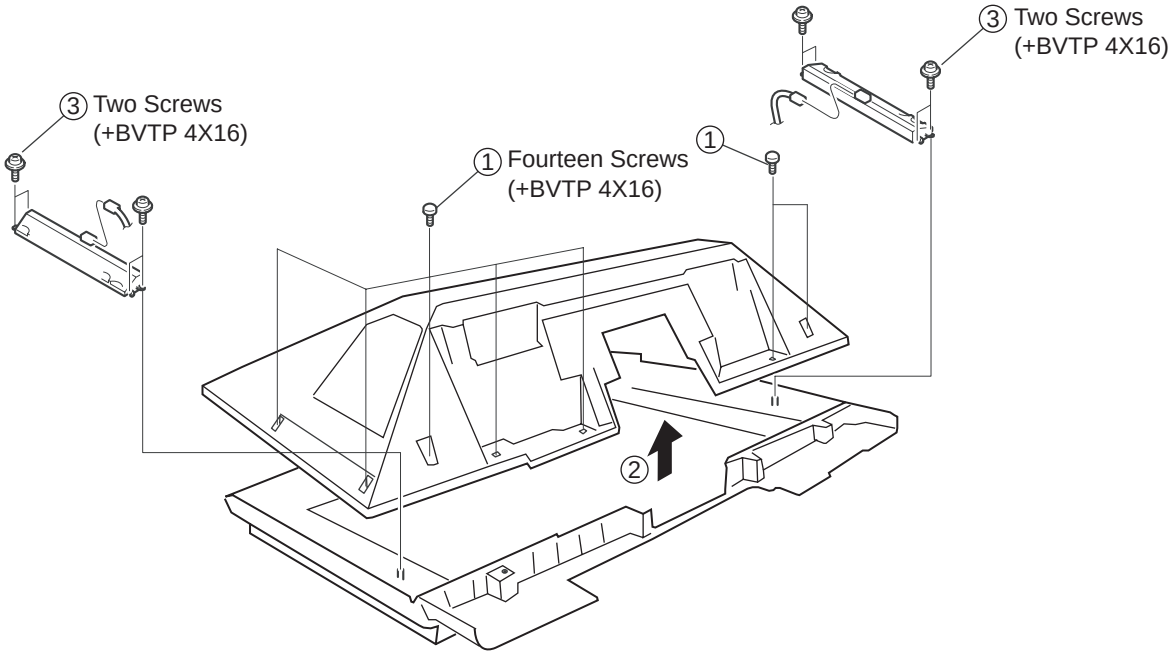

1-21-1.DIFFUSION PLATES (SCREENS) TAPE METHOD

The following diagram illustrates the taping method when replacing the Diffusion Plates.
For Part Numbers refer to section 6-1. Cover.

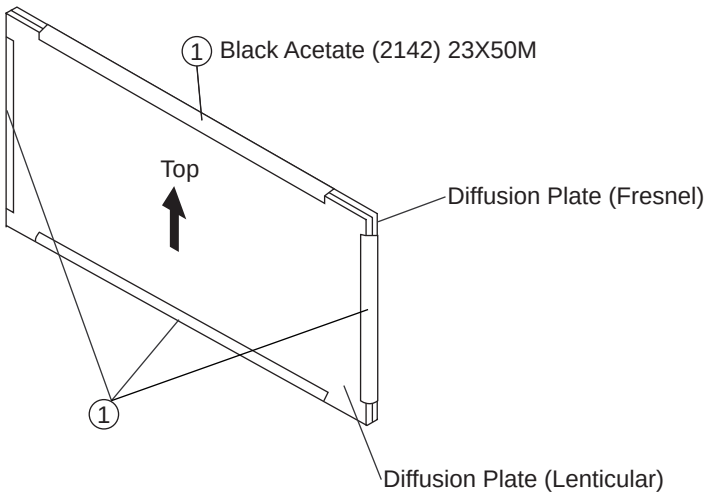

WIRE DRESSING

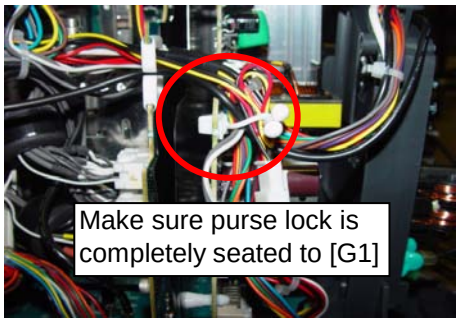

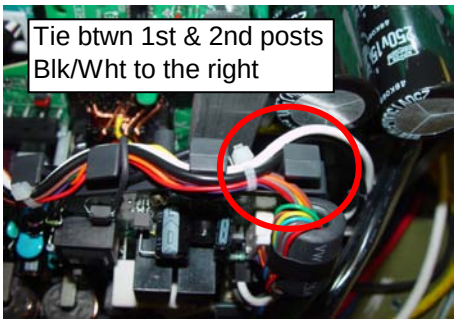

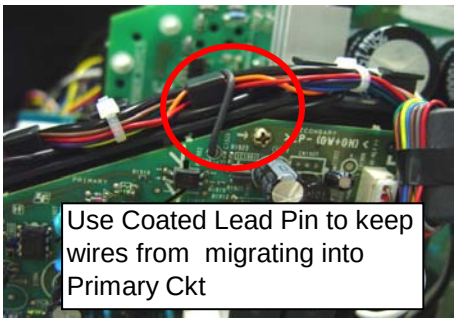

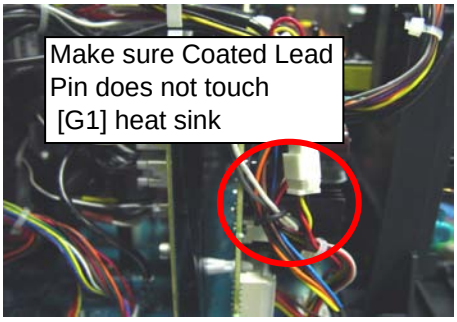

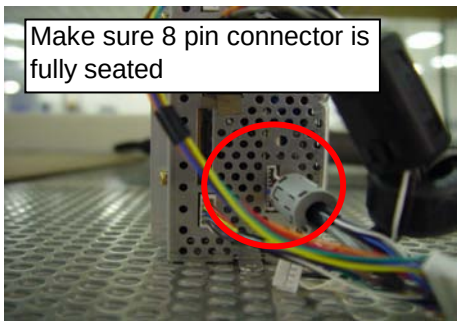

LVDS Cables dresses behind purse lock

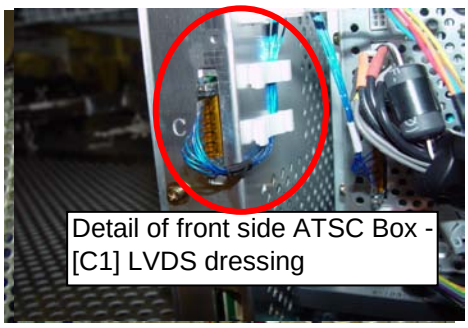
Detail of front side ATSC Box - [C1] LVDS dressing

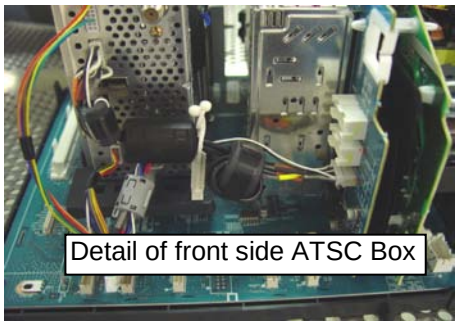
Detail of front side ATSC Box

Emi Tape added to Sub Tuner cable

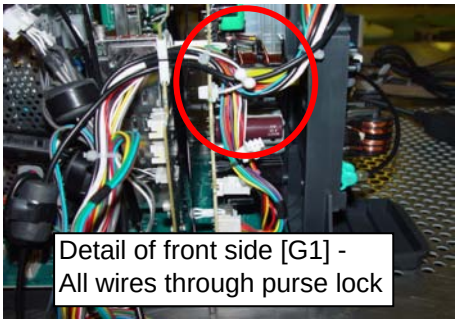
Detail of front side [G1] - All wires through purse lock

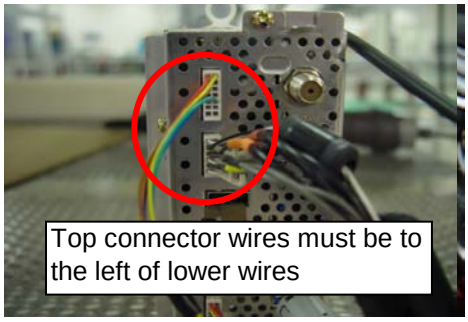
Top connector wires must be to the left of lower wires

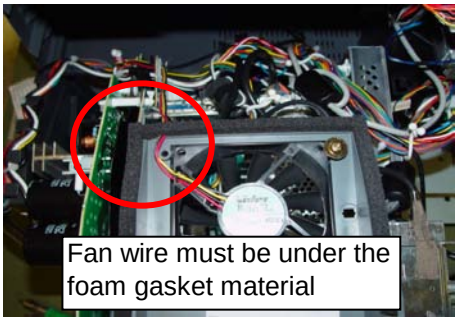
Fan wire must be under the foam gasket material

Detail of USB around ATSC Box Area

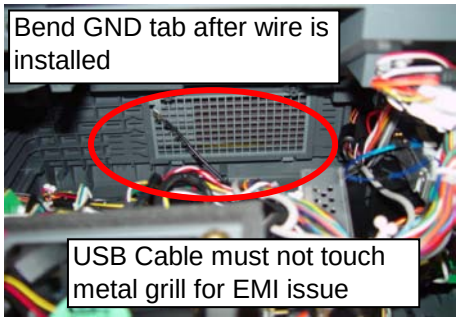
Bend GND tab after wire is installed
USB Cable must not touch metal grill for EMI issue

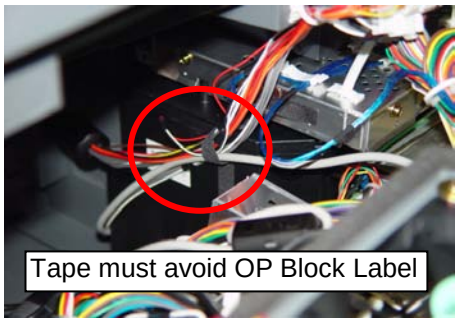
Tape must avoid OP Block Label

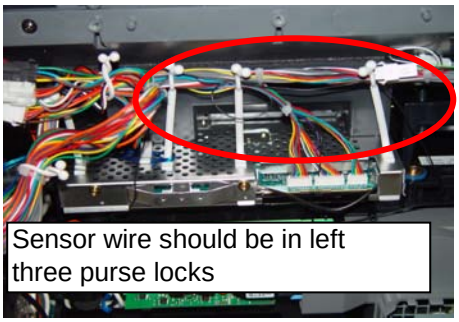
Sensor wire should be in left three purse locks

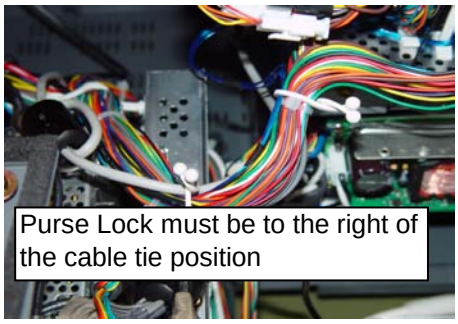
Purse Lock must be to the right of the cable tie position

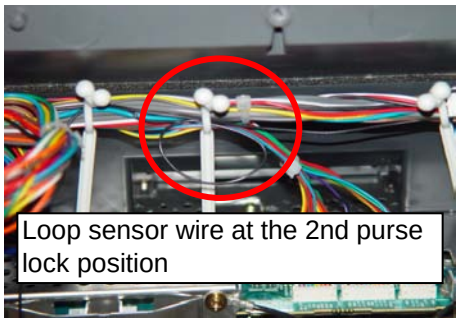
Loop sensor wire at the 2nd purse lock position

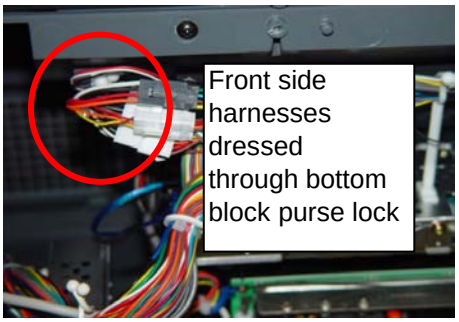
Front side harnesses dressed through bottom block purse lock

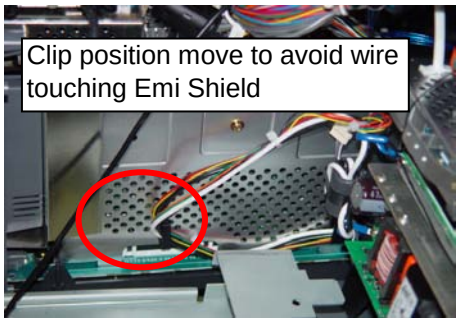
Clip position move to avoid wire touching Emi Shield

Front side harnesses dressed behind the 1st [C1] purse lock & secured with free purse lock

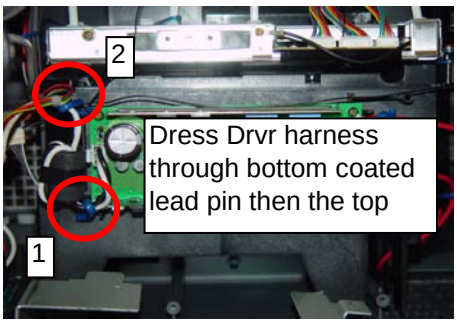
2
Dress Drvr harness through bottom coated lead pin then the top
1

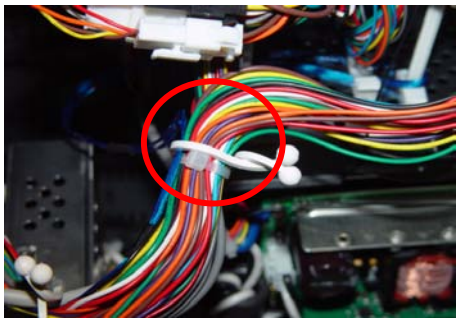

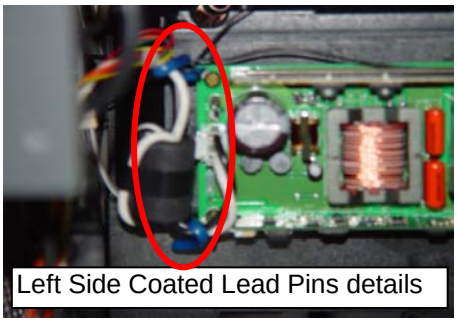
Left Side Coated Lead Pins details

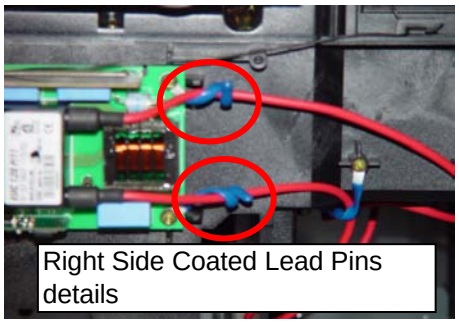
Right Side Coated Lead Pins details

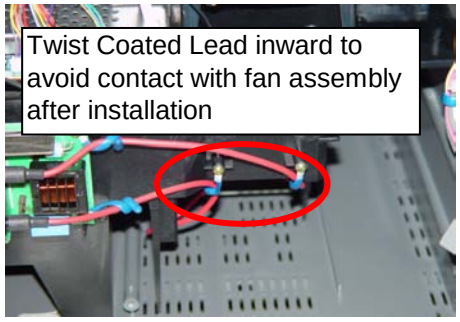
Twist Coated Lead inward to avoid contact with fan assembly after installation

SECTION 2: CIRCUIT ADJUSTMENTS

☛2-1. SETTING THE SERVICE ADJUSTMENT MODE

To adjust various set features, use the Remote Commander to put the set into service mode to display the service menus.

1. TV must be in standby mode. (Power off).
2. Press the following buttons on the Remote Commander within a second of each other:
   DISPLAY ➡ Channel 5 ➡ Volume + ➡ POWER.
   The first service menu (TV) displays.
3. To display the service menu that contains the category you want to adjust, press JUMP on the Remote Commander.
   (Refer to Service Menus)

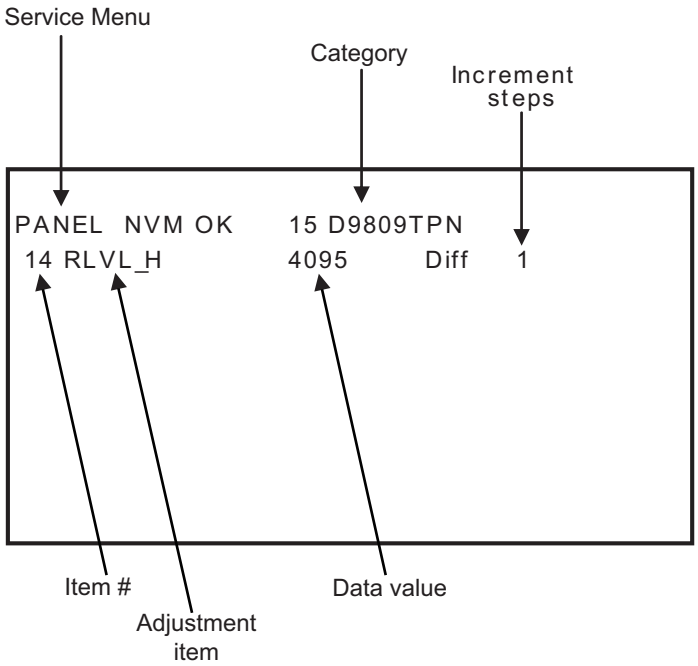

Sample Panel (Display Engine) Service Menu

☛2-2. SERVICE ADJUSTMENT MODE MEMORY

The screen displays the first category in the selected service menu.

4. To change the **category**, press 2 or 5 on the Remote Commander.
   Note: Pressing 2 or 5 only changes the categories within the service menu displayed. To change a category on one of the other service menus, press the JUMP button until the correct service menu is displayed.
5. To change the **adjustment item**, press 1 or 4 on the Remote Commander.
6. To change the **data value**, press 3 or 6 on the Remote Commander.
   Note: To go back to the last saved data value, press 0 then ENTER on the Remote Commander to read the memory.
7. To write into memory, press MUTING then ENTER on the Remote Commander.
8. To exit service mode, turn the power off.

☛SERVICE MENUS

(CATEGORIES ONLY)

TV	Q BOX	WEM 2 (WEGA ENGINE)	PANEL (DISPLAY ENGINE)
VERSION	QM	DCP-INT	OP
CXA2209Q	QT	DCP-OSD	A7001R
AP		DCP-BLK	A7001G
DLBY		DCP-ADJ1	A7001B
BUSSW		DCP-ADJ2	GB_RGB
CXA2103		DCP-USER	FAN_CNT1
CXA2163		DCP-AVP	FAN_CNT2
2DCOMB		MID-1-9	TEMP
TELETEXT		SNNR	OSD_E
MSP SIZE		SNSS	OPTION_E
MSPMD		DRCVR	S_MAS_M
MSPSEL		USER-NR	S_MAS_S
MSPFNC		LPFC	J_L004
MSP3714G		CCPM-1 (1-12)	D9809_1
CCPS (1-11)		OVSN	D9809PIC
DELAY (1-2)		OP	D9809TPN
OSD			D9809CUR
CC M			D9809TG1
CC S			D9809 OSD
CC T			D9809HPF
ID			D9809CSC
OPB GA			D9809CGA
OP GA			D9809HUE
OP US			IMG_SHFT
			PROT_CNT

☛2-3. MEMORY WRITE CONFIRMATION METHOD

1. After completing all adjustments turn the set off with the Remote Commander and **WAIT** for the fans to turn off before proceeding to the next step.
   Note: It may take up to two minutes for the fans to stop.
   Caution: To avoid over heating the lamp, do not unplug the set until the fans have stopped.
2. After the fans have stopped, unplug the set from the AC outlet, then plug the set back in the AC outlet.
3. To verify the changes repeat steps 2 through 5 from sections 2-1. Setting the Service Adjustment Mode and 2-2. Service Adjustment Mode Memory.
4. To exit service mode, turn the power off.

Note: To restore the User Controls and Channel Memory settings to the preset factory conditions, put the set into service mode (step 2 from 2-1. Setting the Service Adjustment Mode), then press 8 then ENTER on the Remote Commander. The set will restart and display the initial setup screen.

☛2-4. REMOTE ADJUSTMENT BUTTONS AND INDICATORS

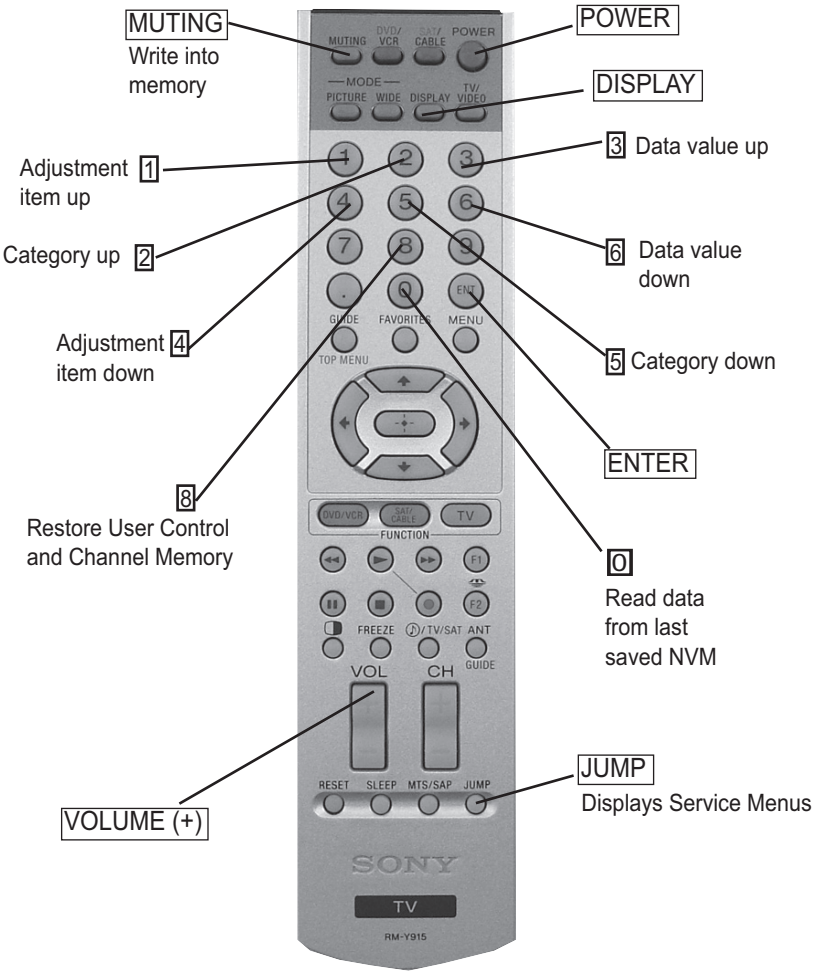

RM-Y915

2-5. H/V CENTER CONFIRMATION AND ADJUSTMENTS

Please check the picture horizontal/vertical center after the replacement of the Optics Unit Block Assembly or any part of the Top assembly.

1. Check the H/V center with 480i monoscope signal in “Full” mode.
2. If the center is shifted, adjust using the following service items:
   NOTE: Please record the steps shifted as ⊿MDHP and ⊿MDVP .

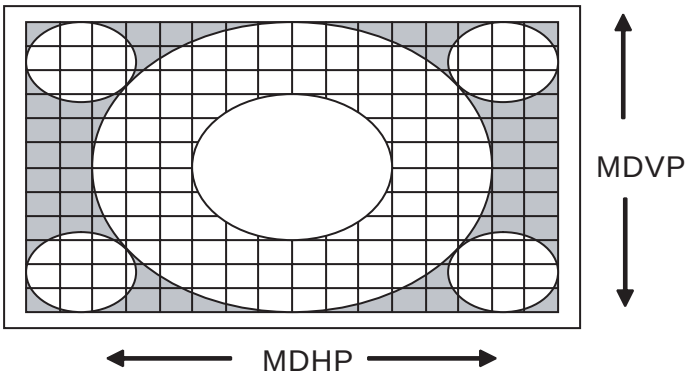

MID-X1 9 MDHP (for H center)
10 MDVP (for V center)

3. Change the WIDE mode to “Normal” and change the register data as follows:

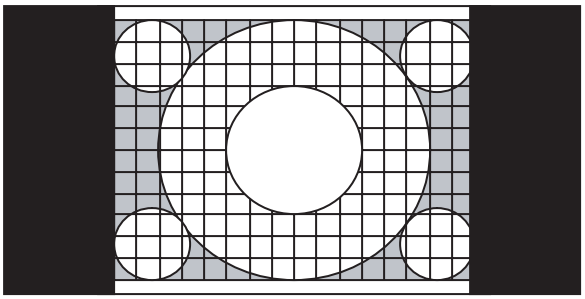

MID-X1 9 MDHP + ⊿MDHP
(Don't change the MDVP data)

4. Display the Twin Picture with the “split” button of the remote commander and change the registers data as follows:

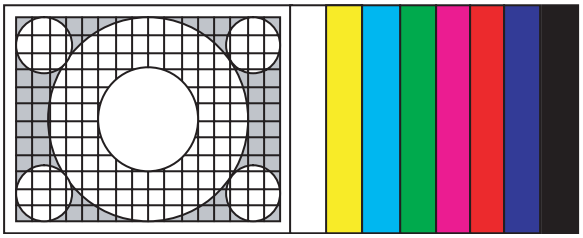

MID-X1 9 MDHP + ⊿MDHP
10 MDVP + ⊿MDVP

5. Press “Favorites” button and change the registers data as follows:

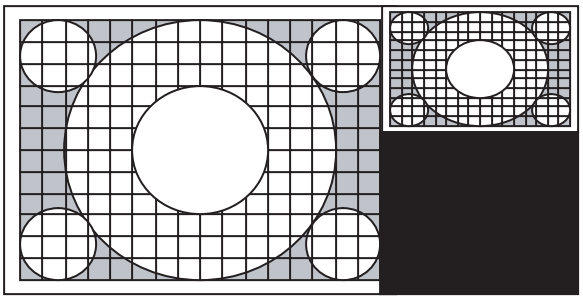

MID-X1 9 MDHP + ⊿MDHP
10 MDVP + ⊿MDVP

6. OSD horizontal position must be adjusted as follows:
   If above sum exceeds 255, set 1 to “16 RP1H” and set the “sum-256” to “17 RP1L”.

Since the registers are different from other cases, be careful to follow complete instructions, and write the data before changing the display/

2-6. SERVICE DATA

Only the Adjustable registers are shown in this data list.

A complete set of the service data, Fixed and Adjustable, can be downloaded at:

http://www-ec.sdp.sel.sony.com/padics/Model_Data_List.htm

☛ **Only Sony authorized Service Technician can access this site. To request a complete list of the service data in PDF format please contact the Service Promotion Department at Service_Promotion@am.sony.com.**

TV SERVICE DATA

CATEGORY	#	ITEM	DESCRIPTION	CONDITION	SERVICE DATA (dec)				
					42WE655	50WE655		MIN	MAX
CXA2103	4	SCON		RF	8	8		0	15
				CV	8	8		0	15
				YC	8	8		0	15
	5	SCOL		RF	3	3		0	15
				CV	3	3		0	15
				YC	3	3		0	15
	6	SHUE		RF	10	10		0	15
				CV	3	3		0	15
				YC	3	3		0	15

WEGA ENGINE SERVICE DATA

CATEGORY	#	ITEM	DESCRIPTION	CONDITION	SERVICE DATA (dec)				
					42WE655	50WE655		MIN	MAX
DCP_OSD	16	RP1H			0	0		0	15
	17	RP1L			251	251		0	255
DCP_ADJ1	2	SCON		Component-480i	185	185		0	255
				Component-480p	192	192		0	255
				Component-1080i	193	193		0	255
				Component-720p	194	194		0	255
				ATSC-480i	178	178		0	255
				ATSC-480p	182	182		0	255
				ATSC-1080i	183	183		0	255
				ATSC-720p	182	182		0	255
				ATSC-TEXT	183	183		0	255
				HDMI-480i	185	185		0	255
				HDMI-480p	192	192		0	255
				HDMI-1080i	193	193		0	255
				HDMI-720p	194	194		0	255
				HDMI(VGA etc)	192	192		0	255
				MemoryStick(MPEG1)	183	183		0	255
				MemoryStick(MPEG2)	183	183		0	255
				MemoryStick(PHOTO)	183	183		0	255

WEGA ENGINE SERVICE DATA

CATEGORY	#	ITEM	DESCRIPTION	CONDITION	SERVICE DATA (dec)				
					42WE655	50WE655		MIN	MAX
DCP_ADJ1	11	SCOL		Component-480i	200	200		0	255
				Component-480p	201	201		0	255
				Component-1080i	213	213		0	255
				Component-720p	213	213		0	255
				ATSC-480i	180	180		0	255
				ATSC-480p	179	179		0	255
				ATSC-1080i	178	178		0	255
				ATSC-720p	189	189		0	255
				ATSC-TEXT	190	190		0	255
				HDMI-480i	200	200		0	255
				HDMI-480p	201	201		0	255
				HDMI-1080i	213	213		0	255
				HDMI-720p	213	213		0	255
				HDMI(VGA etc)	201	201		0	255
				MemoryStick(MPEG1)	190	190		0	255
				MemoryStick(MPEG2)	190	190		0	255
				MemoryStick(PHOTO)	190	190		0	255
MID_1	9	MDHP		Panel-0:Normal(SidePanel)	107	107		0	255
				Panel-0:Window SidePanel	255	255		0	255
				Panel-0:Twin(Center)	17	17		0	255
				Panel-0:Favorite	21	21		0	255
				Panel-0:Other	12	12		0	255
CCPM_1	20	CVYL		Single:UV	183	183		0	255
				Single:Video	193	193		0	255
				UV(Twin/Favorite/Index)	171	171		0	255
				Video(Twin/Favorite/Index)	171	171		0	255
	21	CVCL		Single:UV	128	128		0	255
				Single:Video	133	133		0	255
				UV(Twin/Favorite/Index)	136	136		0	255
				Video(Twin/Favorite/Index)	136	136		0	255
	26	SHUE		Single:UV	32	32		0	63
				UV(Twin/Favorite/Index)	32	32		0	63

LCD ENGINE SERVICE DATA

CATEGORY	#	ITEM	DESCRIPTION	CONDITION	SERVICE DATA (dec) 42WE655	50WE655		MIN	MAX
A7001R	0	RGAINA			204	204		0	255
	1	RGAINB			32	32		0	63
	2	ROFSETA			165	165		0	255
	3	ROFSETB			32	32		0	63
	6	RVCOM			47	47		0	63
	7	RSIDLVL			8	8		0	15
A7001G	0	GGAINA			190	190		0	255
	1	GGAINB			32	32		0	63
	2	GOFSETA			146	146		0	255
	3	GOFSETB			32	32		0	63
	6	GVCOM			46	46		0	63
	7	GSIDLVL			8	8		0	15
A7001B	0	BGAINA			179	179		0	255
	1	BGAINB			32	32		0	63
	2	BOFSETA			125	125		0	255
	3	BOFSETB			32	32		0	63
	6	BVCOM			42	42		0	63
	7	BSIDLVL			8	8		0	15
D9809PIC	0	CNTRAST			165	165		0	255
	1	SCON			32	32		0	127
	2	BRT			220	220		0	255
	3	SBRT			192	192		0	255
	4	RGAIN			128	128		0	255
	5	GGAIN			128	128		0	255
	6	BGAIN			128	128		0	255
	7	RBIAS			0	0		0	255
	8	GBIAS			0	0		0	255
	9	BBIAS			0	0		0	255
	10	USC_ON			1	1		0	1
	11	BLK_LEF		pawn_pic3_normal	0	0		0	2047
				pawn_pic3_wide	0	0		0	2047
	12	BLK_RGT		pawn_pic3_normal	0	0		0	2047
				pawn_pic3_wide	0	0		0	2047
	13	BLK_TOP			0	0		0	2047
	14	BLK_BTM			0	0		0	2047
	15	BLK_LVL			0	0		0	63
	16	INBLKON			0	0		0	1
	17	OBLK_ON			0	0		0	1

2-7. ID MAP TABLE

Model	ID-O	ID-1	ID-2	ID-3	ID-4	ID-5	ID-6	ID-7	ID-8
KF-42WE655	17	1	239	107	0	99	54	31	10
KF-50WE655	17	1	239	107	0	99	54	31	10

SECTION 3: DIAGRAMS

3-1. CIRCUIT BOARDS LOCATION

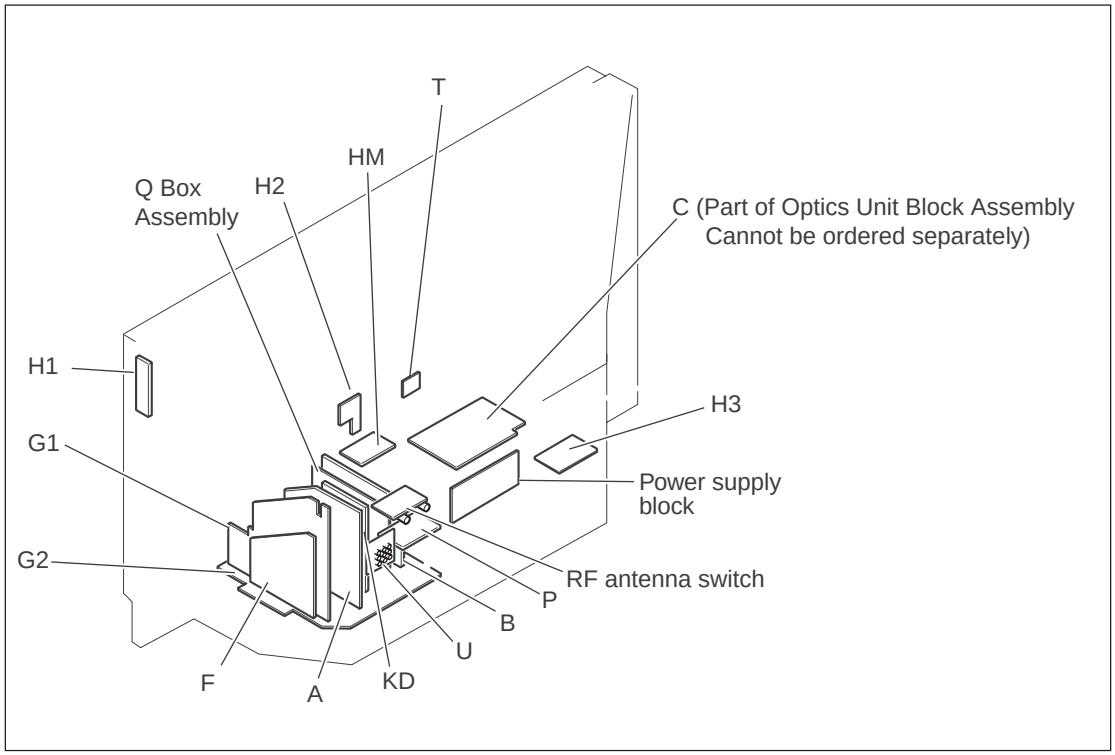

3-2. PRINTED WIRING BOARDS AND SCHEMATIC DIAGRAMS INFORMATION

All capacitors are in µF unless otherwise noted. pF : µµF 50WV or less are not indicated except for electrolytics and tantalums.

All electrolytics are in 50V unless otherwise specified.

All resistors are in ohms. kΩ=1000Ω, MΩ=1000kΩ

Indication of resistance, which does not have one for rating electrical power, is as follows: **Pitch : 5mm**
Rating electrical power : $^1/_4$ W

$^1/_4$ W in resistance, $^1/_{10}$ W and $^1/_{16}$ W in chip resistance.

: nonflammable resistor

: fusible resistor

: internal component

: panel designation and adjustment for repair

: earth ground

: earth-chassis

All variable and adjustable resistors have characteristic curve B, unless otherwise noted.

Readings are taken with a color-bar signal input.

Readings are taken with a 10MΩ digital multimeter.

Voltages are DC with respect to ground unless otherwise noted.

Voltage variations may be noted due to normal production tolerances.

All voltages are in V.

S : Measurement impossibility.

: B+line.

: B-line. (Actual measured value may be different).

: signal path. (RF)

Circled numbers are waveform references.

The components identified by shading and ⚠ symbol are critical for safety. Replace only with part number specified.

The symbol indicates a fast operating fuse and is displayed on the component side of the board. Replace only with fuse of the same rating as marked.

Les composants identifies per un trame et une marque ⚠ sont critiques pour la securite. Ne les remplacer que par une piece portant le numero specifie.

Le symbole indique une fusible a action rapide. Doit etre remplace par une fusible de meme yaleur, comme maque.

REFERENCE INFORMATION

RESISTOR

: RN	METAL FILM
: RC	SOLID
: FPRD	NONFLAMMABLE CARBON
: FUSE	NONFLAMMABLE FUSIBLE
: RW	NONFLAMMABLE WIREWOUND
: RS	NONFLAMMABLE METAL OXIDE
: RB	NONFLAMMABLE CEMENT
: ※	ADJUSTMENT RESISTOR

COIL

: LF-8L	MICRO INDUCTOR

CAPACITOR

: TA	TANTALUM
: PS	STYROL
: PP	POLYPROPYLENE
: PT	MYLAR
: MPS	METALIZED POLYESTER
: MPP	METALIZED POLYPROPYLENE
: ALB	BIPOLAR
: ALT	HIGH TEMPERATURE
: ALR	HIGH RIPPLE

Terminal name of semiconductors in silk screen printed circuit (✻)

	Device	Printed symbol	Terminal name	Circuit
①	Transistor		Collector Base Emitter	
②	Transistor		Collector Base Emitter	
③	Diode		Cathode Anode	
④	Diode		Cathode Anode (NC)	
⑤	Diode		Cathode Anode (NC)	
⑥	Diode		Common Anode Cathode	
⑦	Diode		Common Anode Cathode	
⑧	Diode		Common Anode Anode	
⑨	Diode		Common Anode Anode	
⑩	Diode		Common Cathode Cathode	
⑪	Diode		Common Cathode Cathode	
⑫	Diode		Anode Anode Cathode Cathode Anode Anode	
⑬	Transistor (FET)		Drain Source Gate	
⑭	Transistor (FET)		Drain Source Gate	
⑮	Transistor (FET)		Source Drain Gate	
⑯	Transistor		Emitter Collector Base	
⑰	Transistor		C2 B1 E1 E2 B2 C1	
⑱	Transistor		C1 B2 E2 E1 B1 C2	
⑲	Transistor		C1 B2 E2 E1 B1 C2	
⑳	Transistor		C1 B2 E2 E1 B1 C2	
㉑	Transistor		E2 B1 E1 C2 C1(B2)	
㉒	Transistor		(B2) B1 E1 E2 C1 C2	
㉓	Transistor		(B2) E2 E1 B1 C2 C1	
—	Discrete semiconductot			

(Chip semiconductors that are not actually used are included.)

Ver.1.5

3-3. BLOCK DIAGRAMS

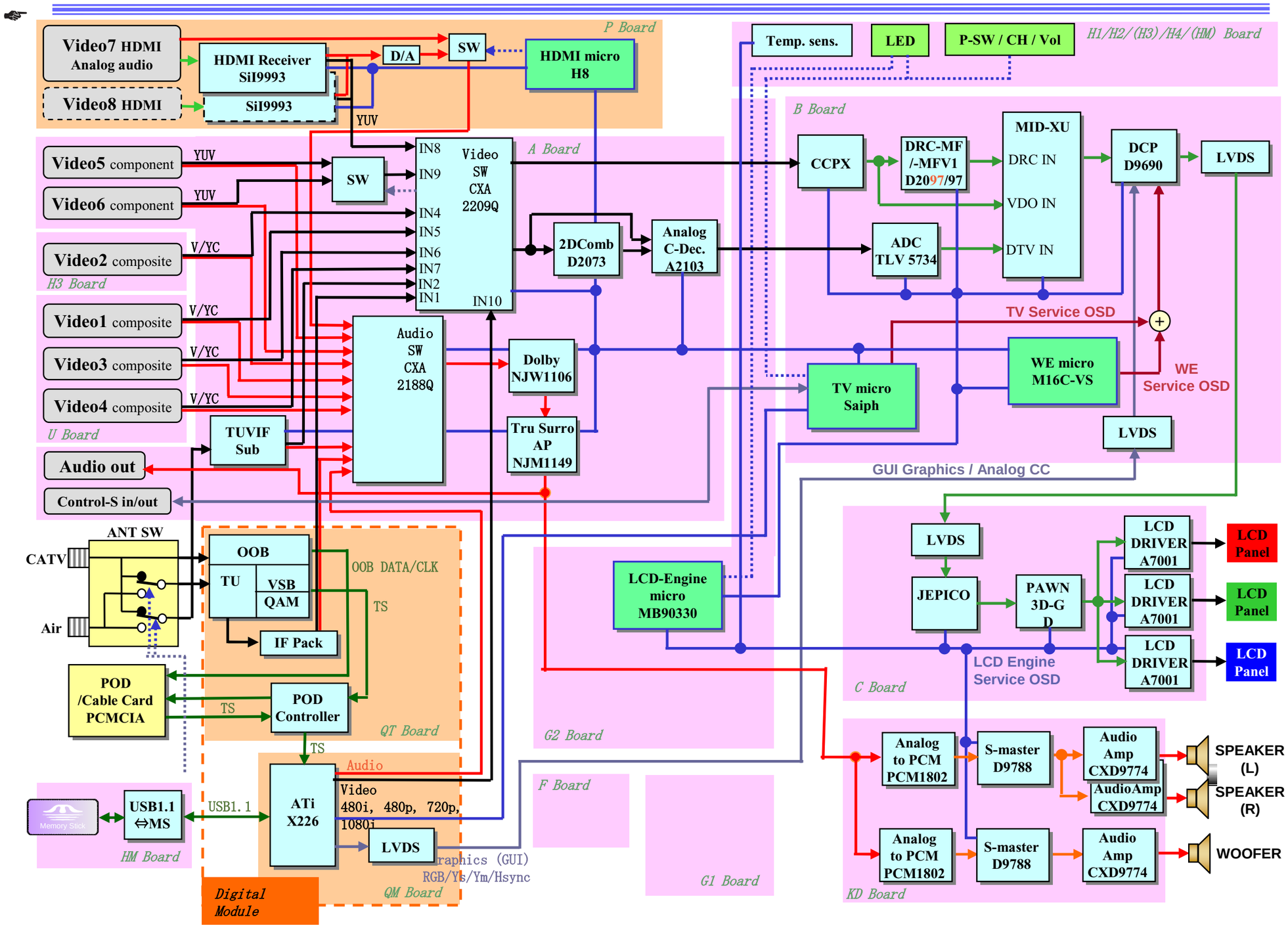

3-4. SCHEMATICS AND SUPPORTING INFORMATION

A BOARD SCHEMATIC DIAGRAM (1 OF 3)

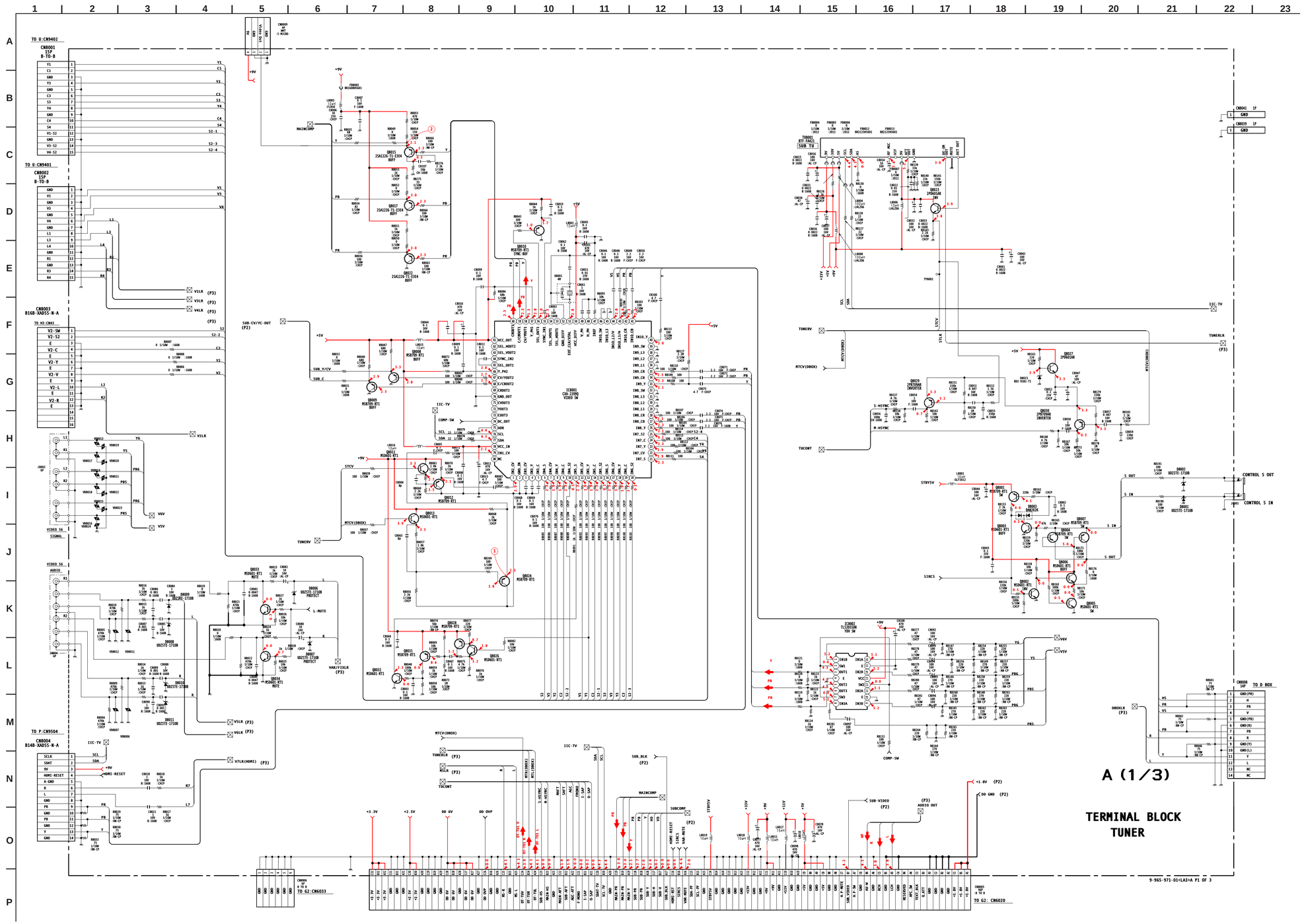

A BOARD WAVEFORMS

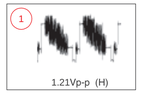

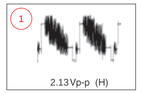

A BOARD SCHEMATIC DIAGRAM (2 OF 3)

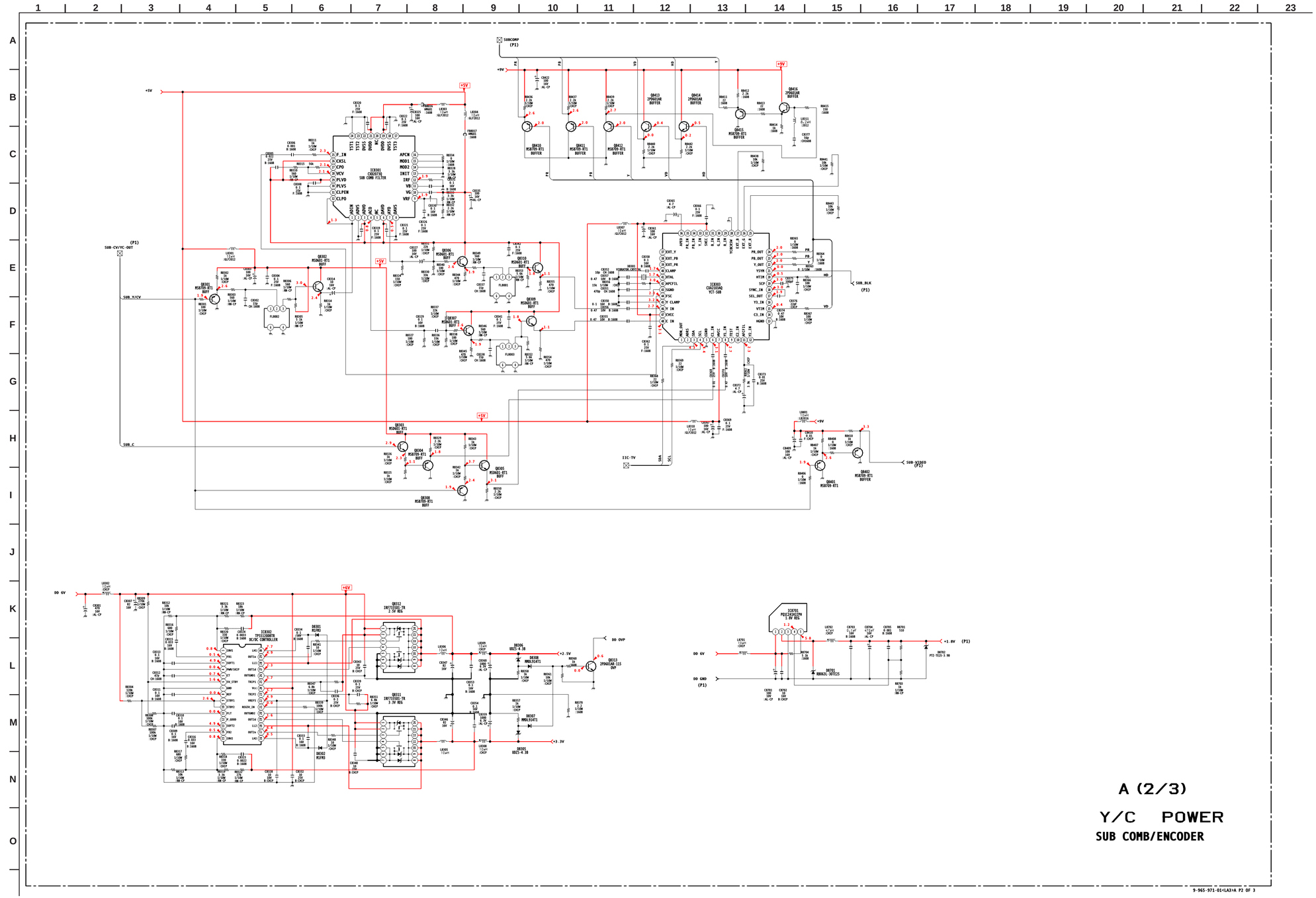

A BOARD SCHEMATIC DIAGRAM (3 OF 3)

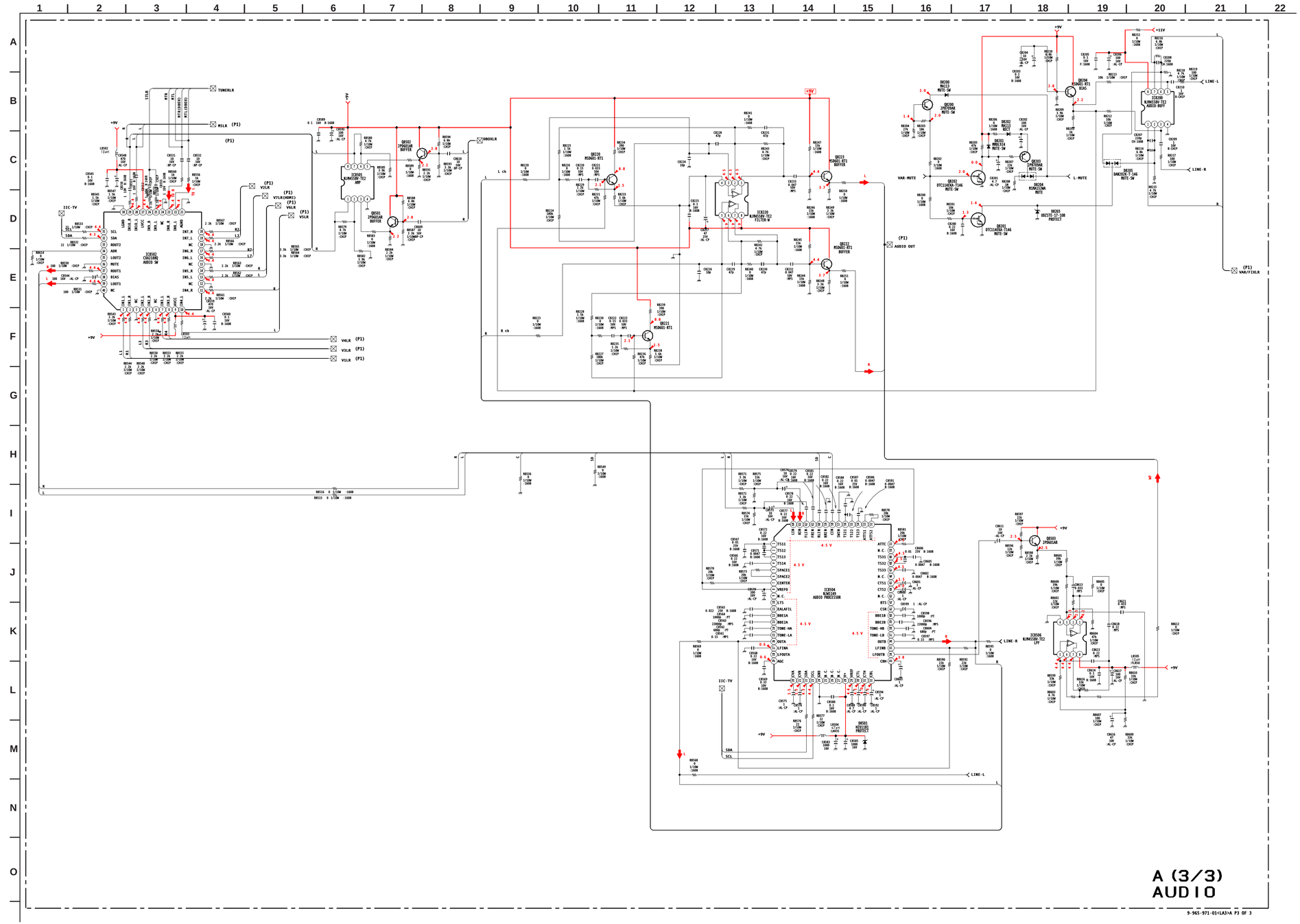

A [TERMINAL BLOCK, TUNER, Y/C POWER, SUB COMB/ENCODER, AUDIO]

COMPONENT SIDE

A BOARD LOCATOR LIST COMPONENT SIDE

DIODE		IC		TRANSISTOR	
D8200	D-2	IC8001	F-5	Q8003	H-1
D8301	H-2	IC8002	F-2	Q8004	H-1
D8302	H-3	IC8200	C-1	Q8005	H-2
D8501	B-3	IC8220	B-3	Q8006	H-1
D8701	H-8	IC8301	B-5	Q8007	H-1
D8702	H-9	IC8302	H-2	Q8008	F-5
		IC8303	D-4	Q8009	F-5
		IC8502	F-2	Q8010	G-4
		IC8504	B-1	Q8204	D-1
		IC8505	G-3	Q8301	C-4
		IC8506	A-4	Q8302	C-5
		IC8701	H-9	Q8305	C-4
				Q8306	C-6
				Q8307	C-6
				Q8308	D-4
				Q8309	D-4
				Q8310	D-5
				Q8311	H-3
				Q8312	H-2
				Q8401	H-9
				Q8402	H-9
				Q8410	E-3
				Q8411	E-3
				Q8412	E-3
				Q8413	E-3
				Q8414	E-3

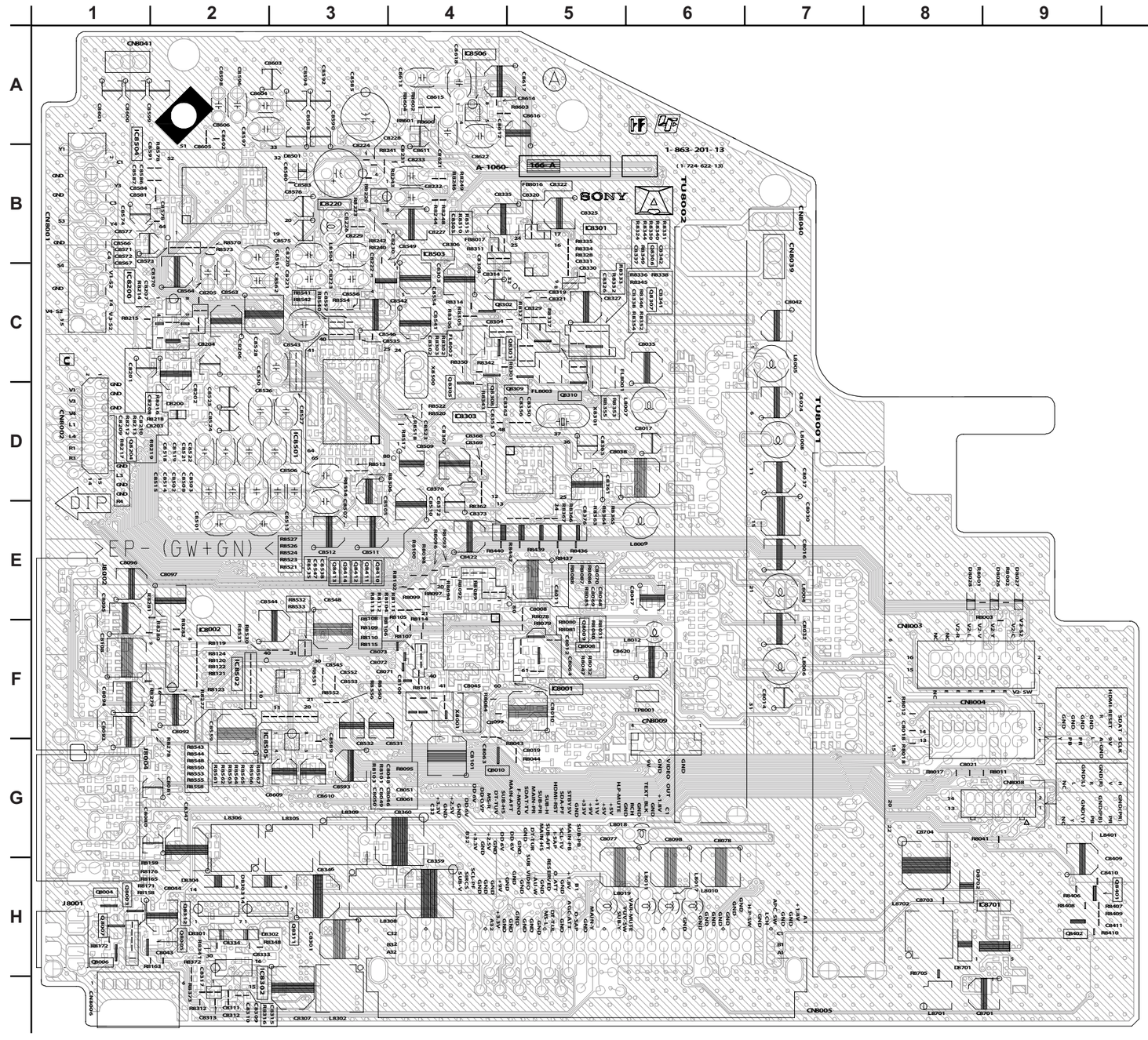

A [TERMINAL BLOCK, TUNER, Y/C POWER, SUB COMB/ENCODER, AUDIO]

CONDUCTOR SIDE

A BOARD LOCATOR LIST CONDUCTOR SIDE

DIODE		TRANSISTOR	
D8001	H-9	Q8001	H-9
D8002	H-9	Q8002	H-9
D8003	H-9	Q8011	F-6
D8006	G-8	Q8012	G-6
D8007	G-8	Q8013	E-6
D8008	G-9	Q8015	G-6
D8009	G-8	Q8017	G-6
D8010	H-8	Q8022	F-6
D8011	G-9	Q8023	F-4
D8023	E-5	Q8024	E-7
D8201	C-8	Q8026	F-7
D8202	C-8	Q8027	F-5
D8203	C-9	Q8028	G-7
D8204	D-8	Q8029	F-5
D8205	C-9	Q8030	D-4
D8305	H-7	Q8031	G-7
D8306	H-7	Q8032	G-7
D8307	H-7	Q8033	G-9
D8308	H-7	Q8034	G-8
		Q8200	D-9
		Q8201	C-9
		Q8202	D-9
		Q8203	C-8
		Q8220	C-8
		Q8221	C-7
		Q8222	B-7
		Q8223	B-6
		Q8303	D-6
		Q8304	C-6
		Q8313	H-6
		Q8415	E-5
		Q8416	E-5
		Q8501	G-8
		Q8502	G-7
		Q8503	A-7

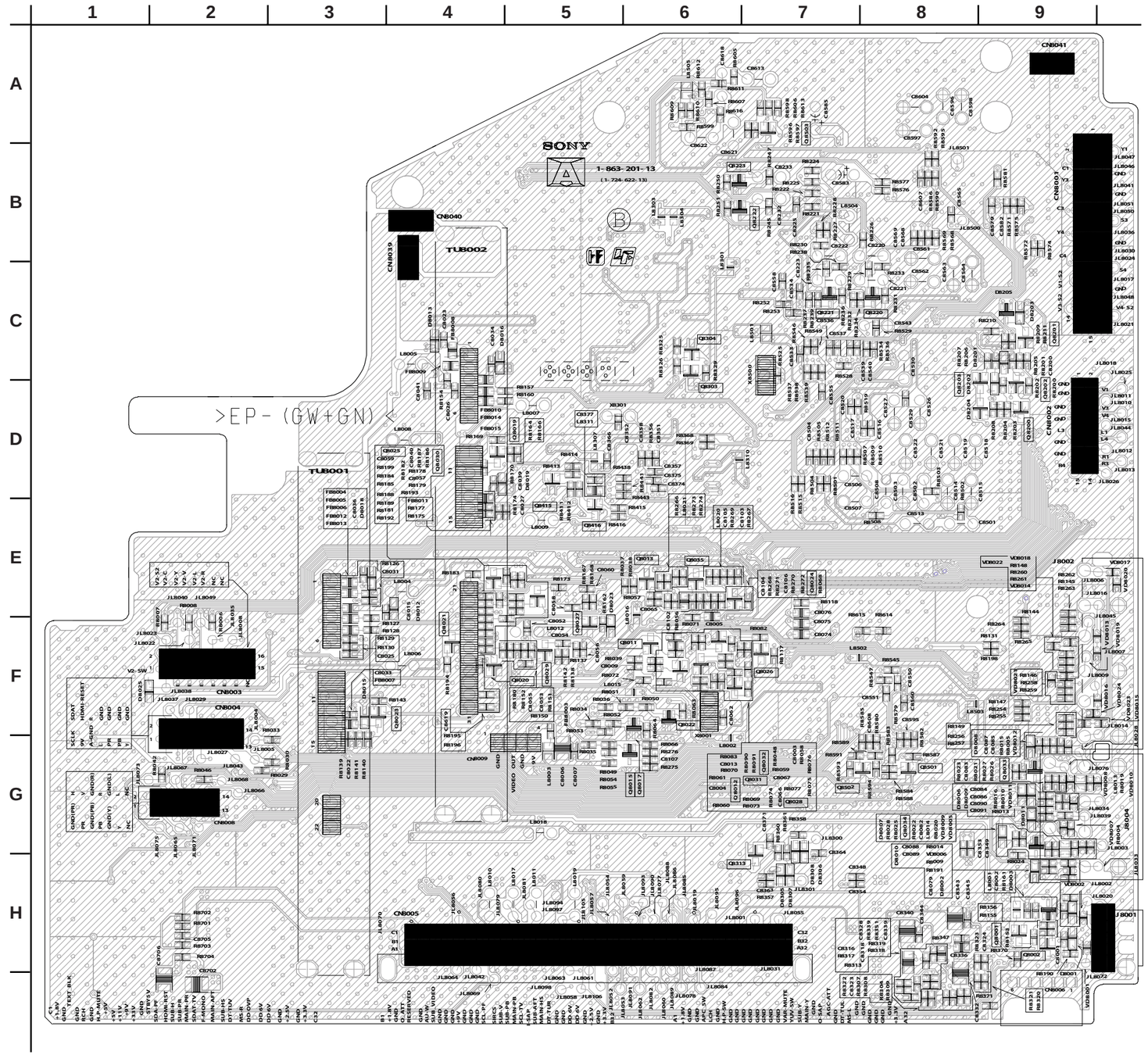

B BOARD SCHEMATIC DIAGRAM (1 OF 6)

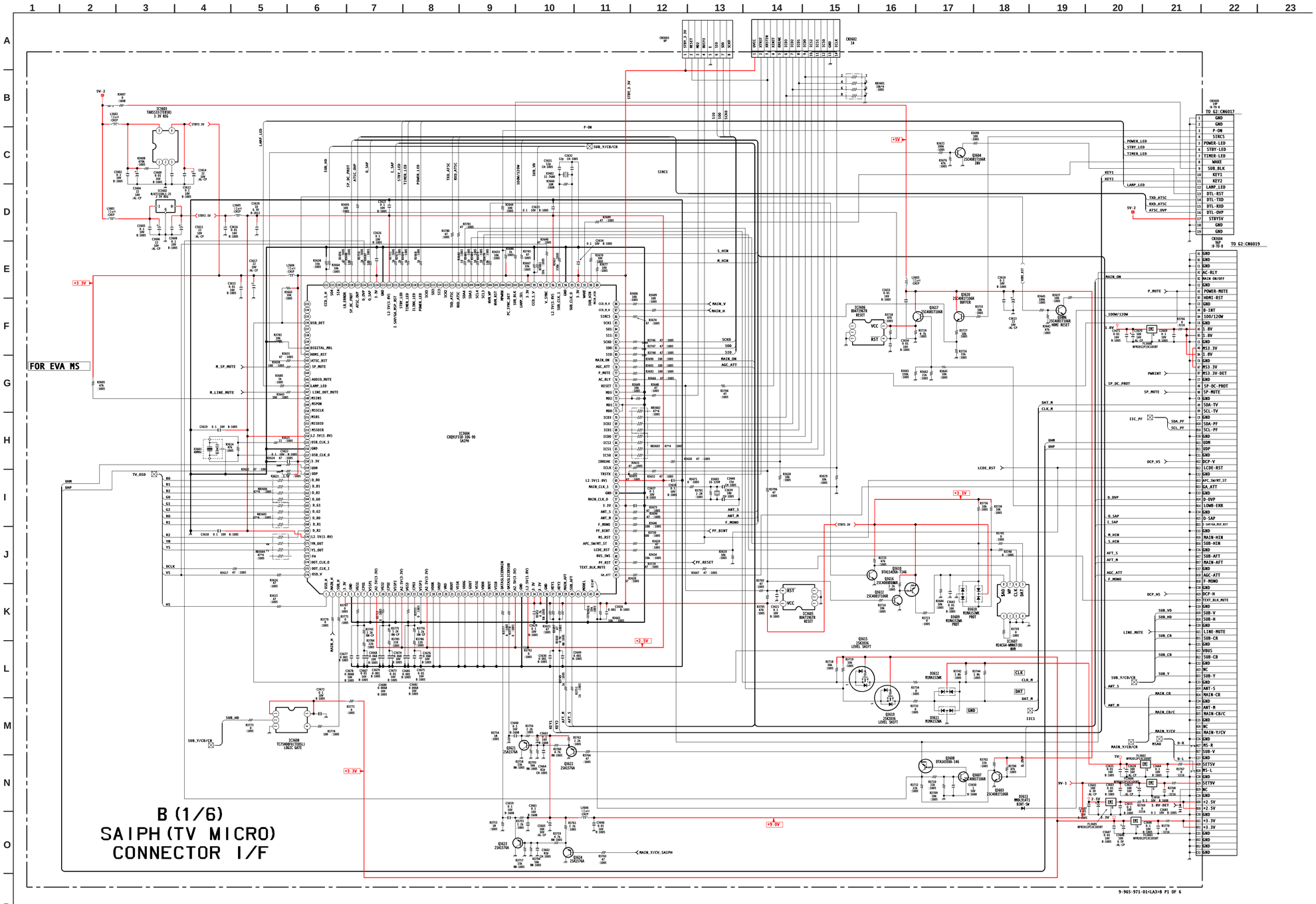

B BOARD SCHEMATIC DIAGRAM (2 OF 6)

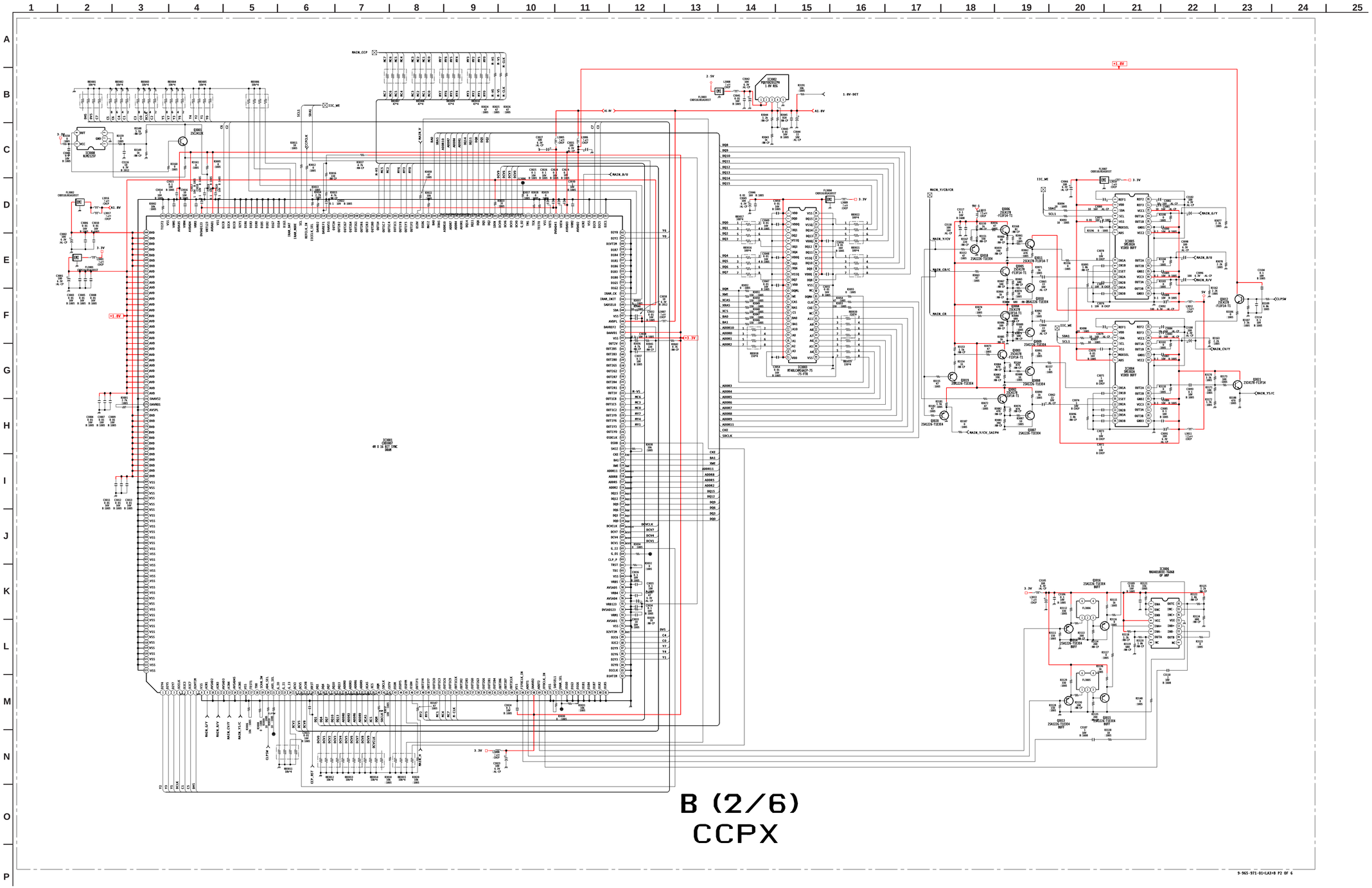

B BOARD SCHEMATIC DIAGRAM (3 OF 6)

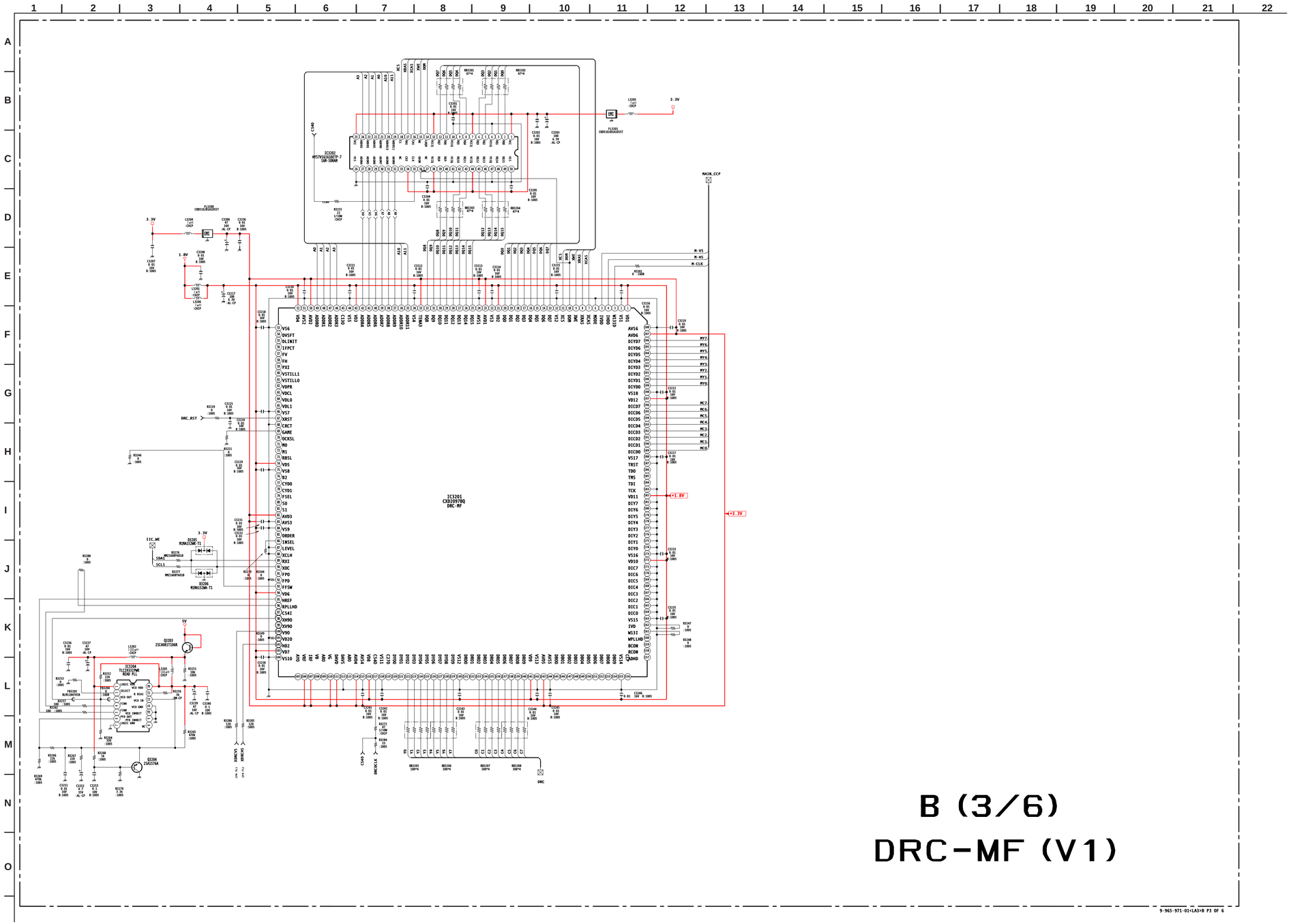

B BOARD SCHEMATIC DIAGRAM (4 OF 6)

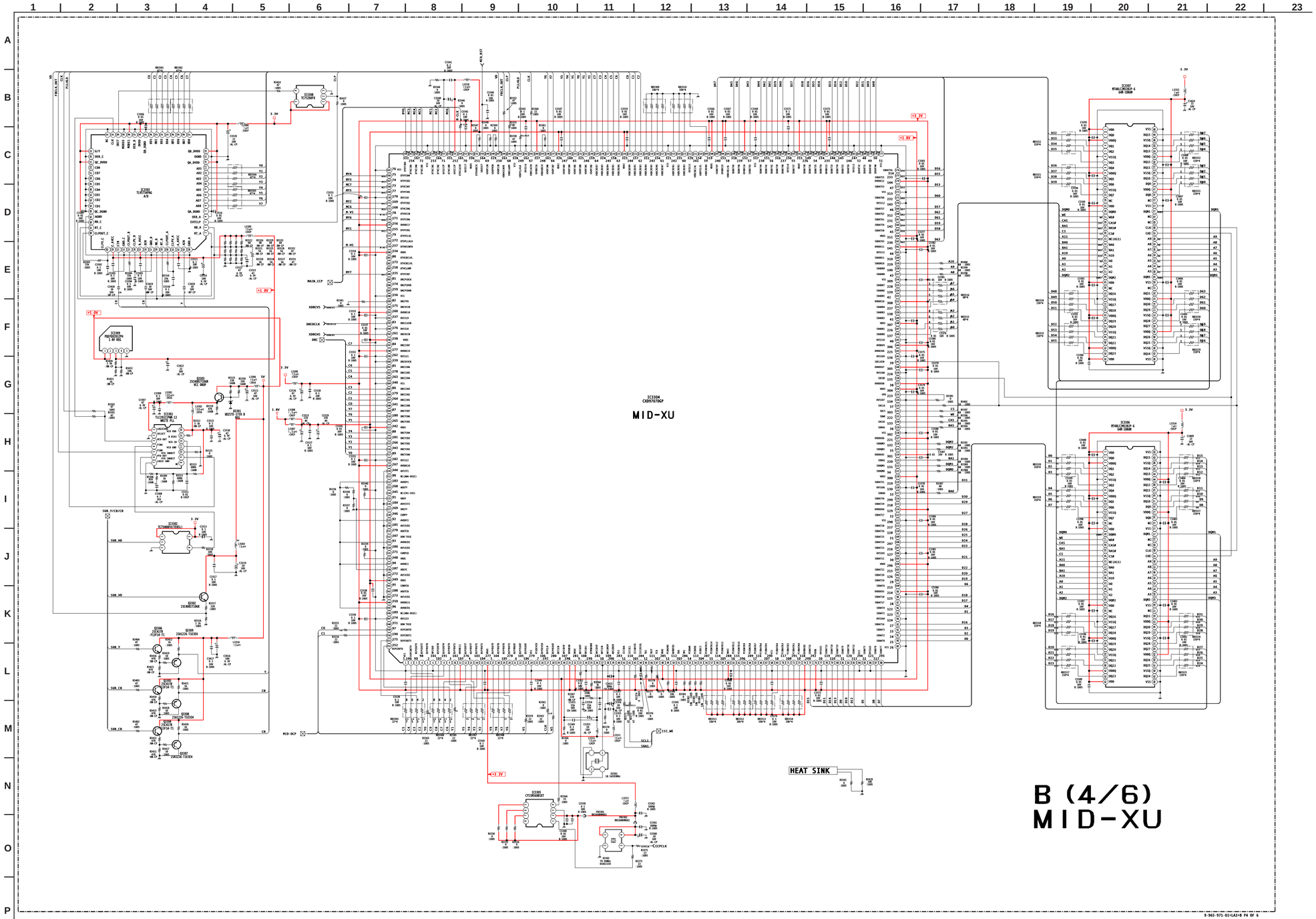

B BOARD SCHEMATIC DIAGRAM (5 OF 6)

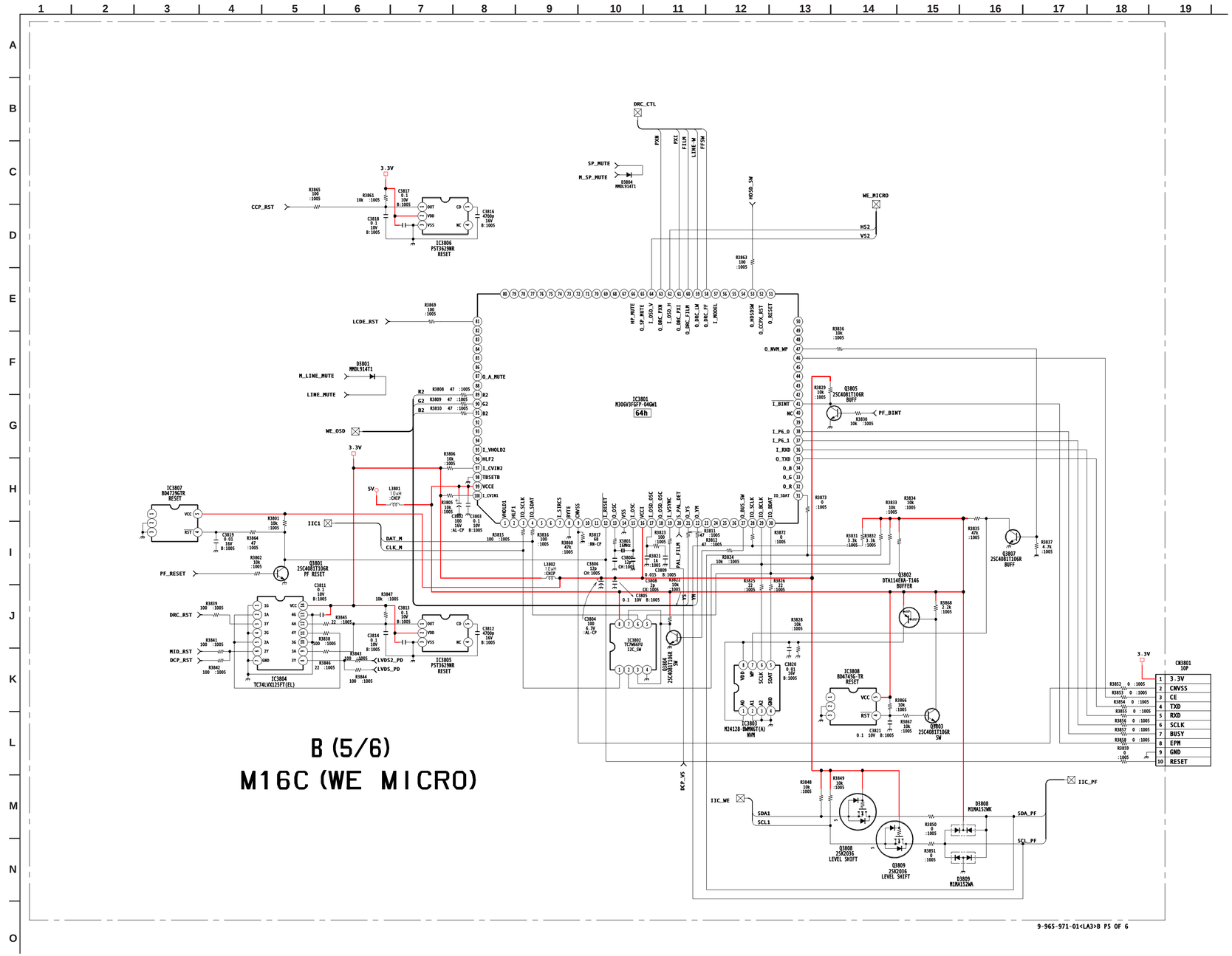

B BOARD SCHEMATIC DIAGRAM (6 OF 6)

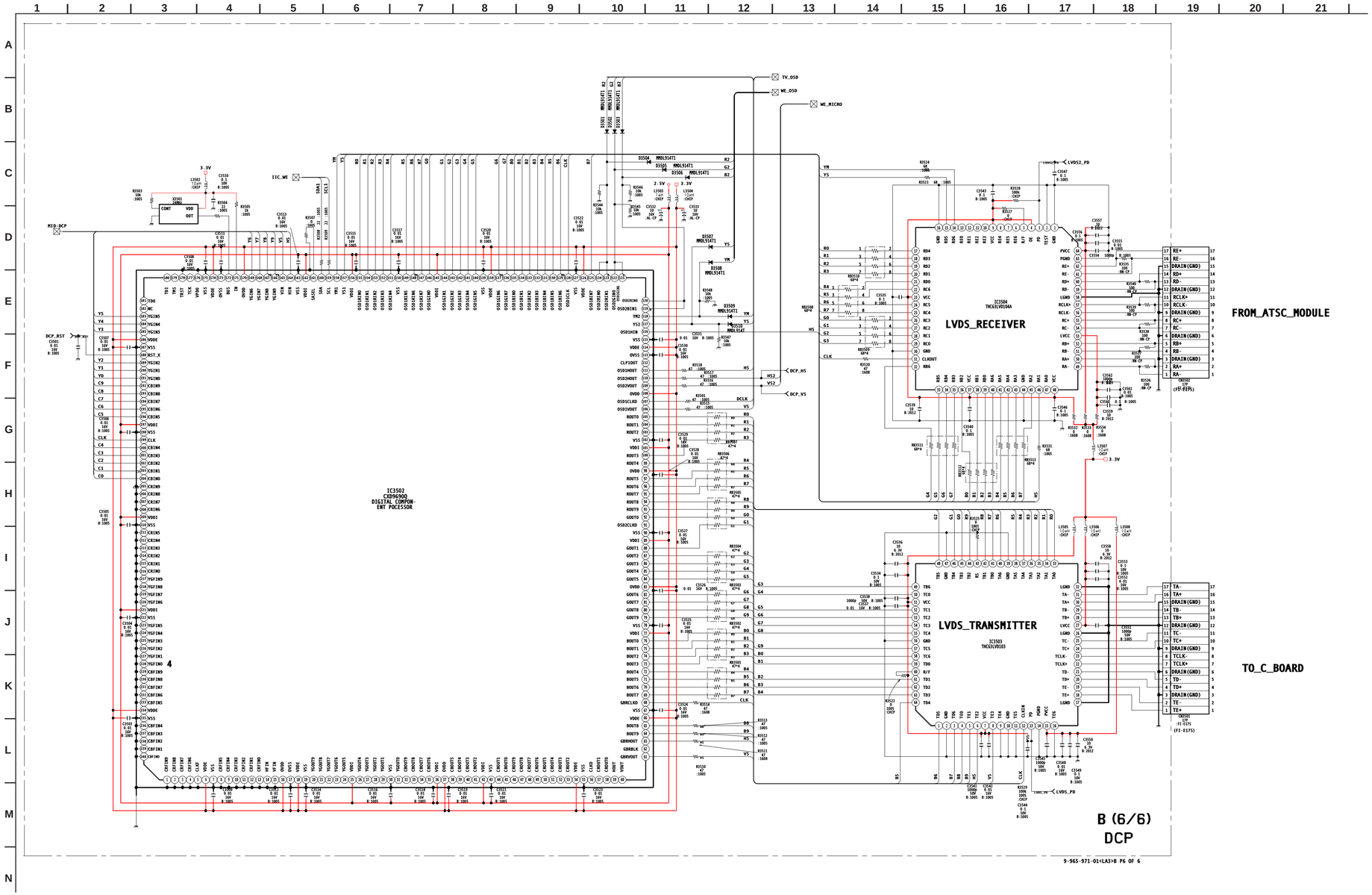

B [SAIPH (TV MICRO) CONNECTOR I/F, CCPX, DRC-MF (V1), MID-XU, M16C (WE MICRO), DCP]

COMPONENT SIDE

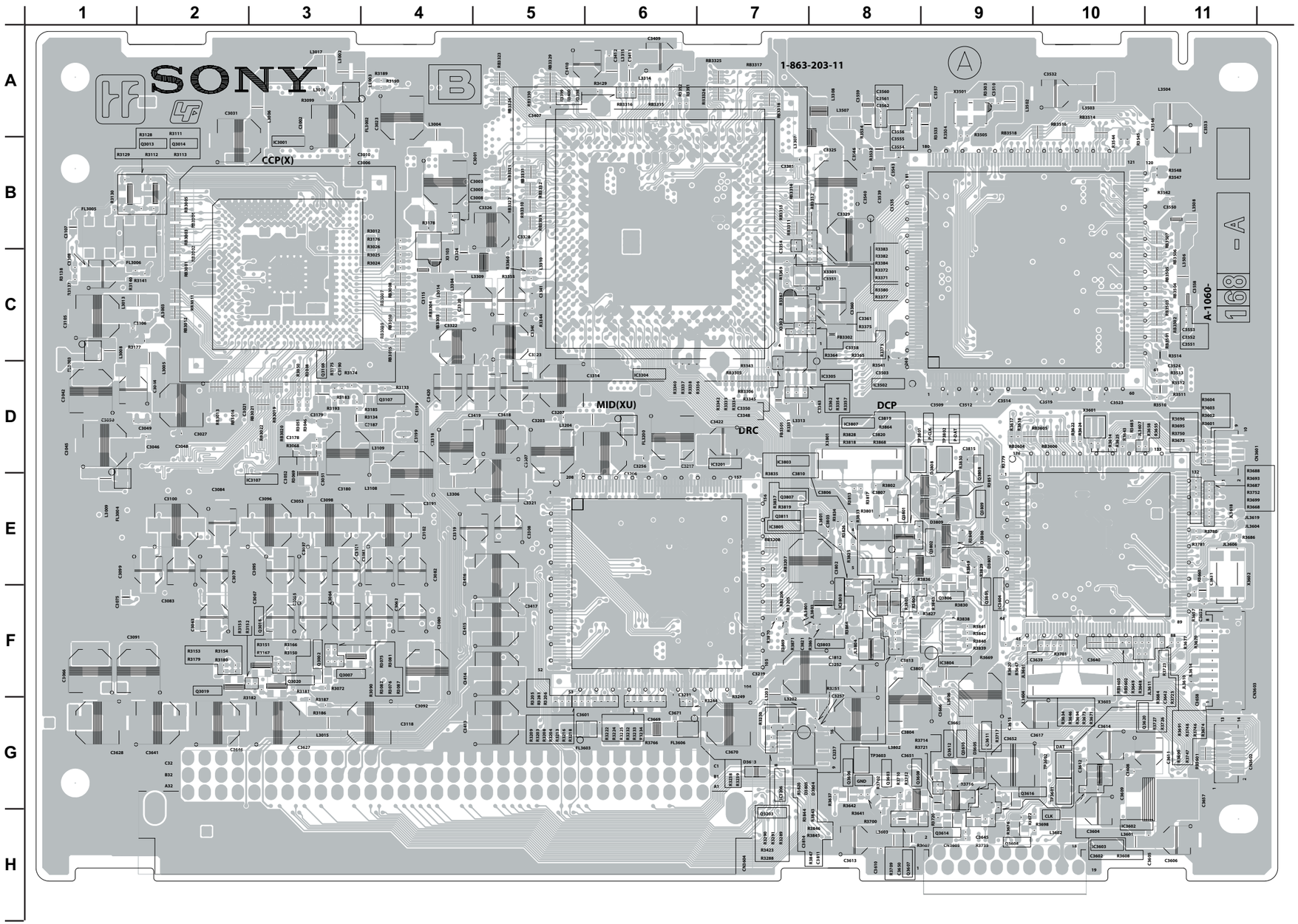

B [SAIPH (TV MICRO) CONNECTOR I/F, CCPX, DRC-MF (V1), MID-XU, M16C (WE MICRO), DCP]

CONDUCTOR SIDE

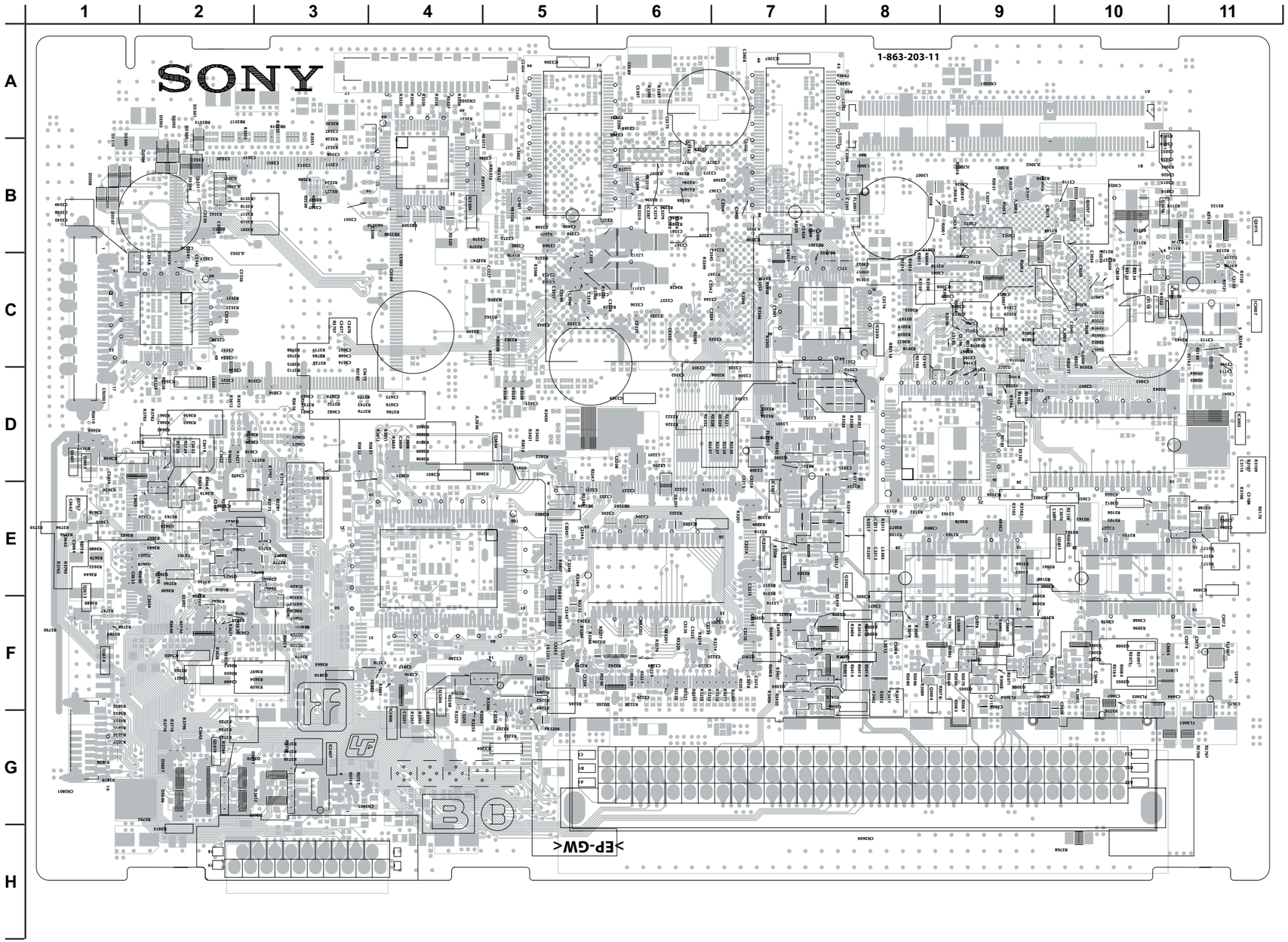

G2 BOARD SCHEMATIC DIAGRAM (1 OF 2)

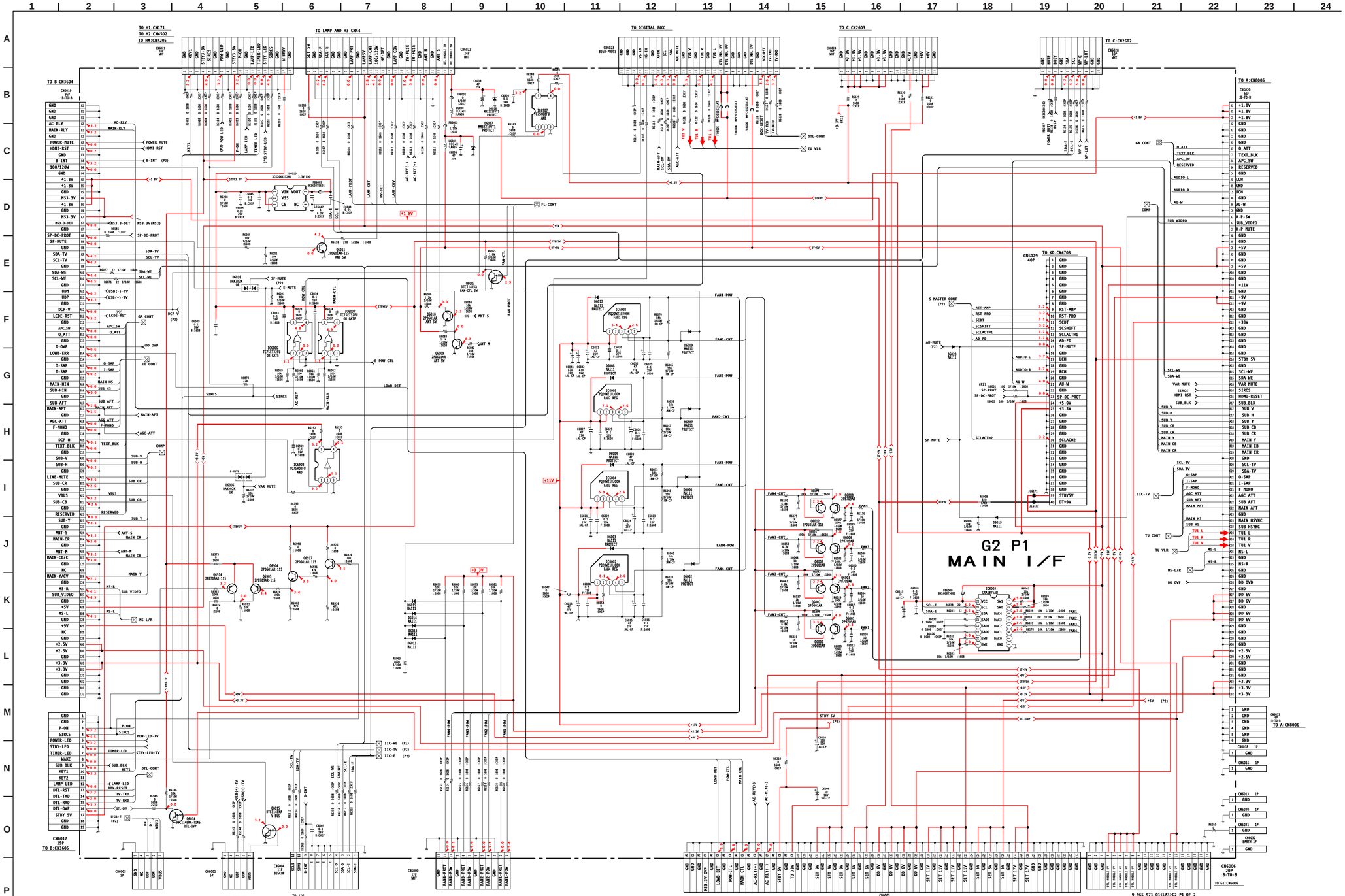

G2 BOARD SCHEMATIC DIAGRAM (2 OF 2)

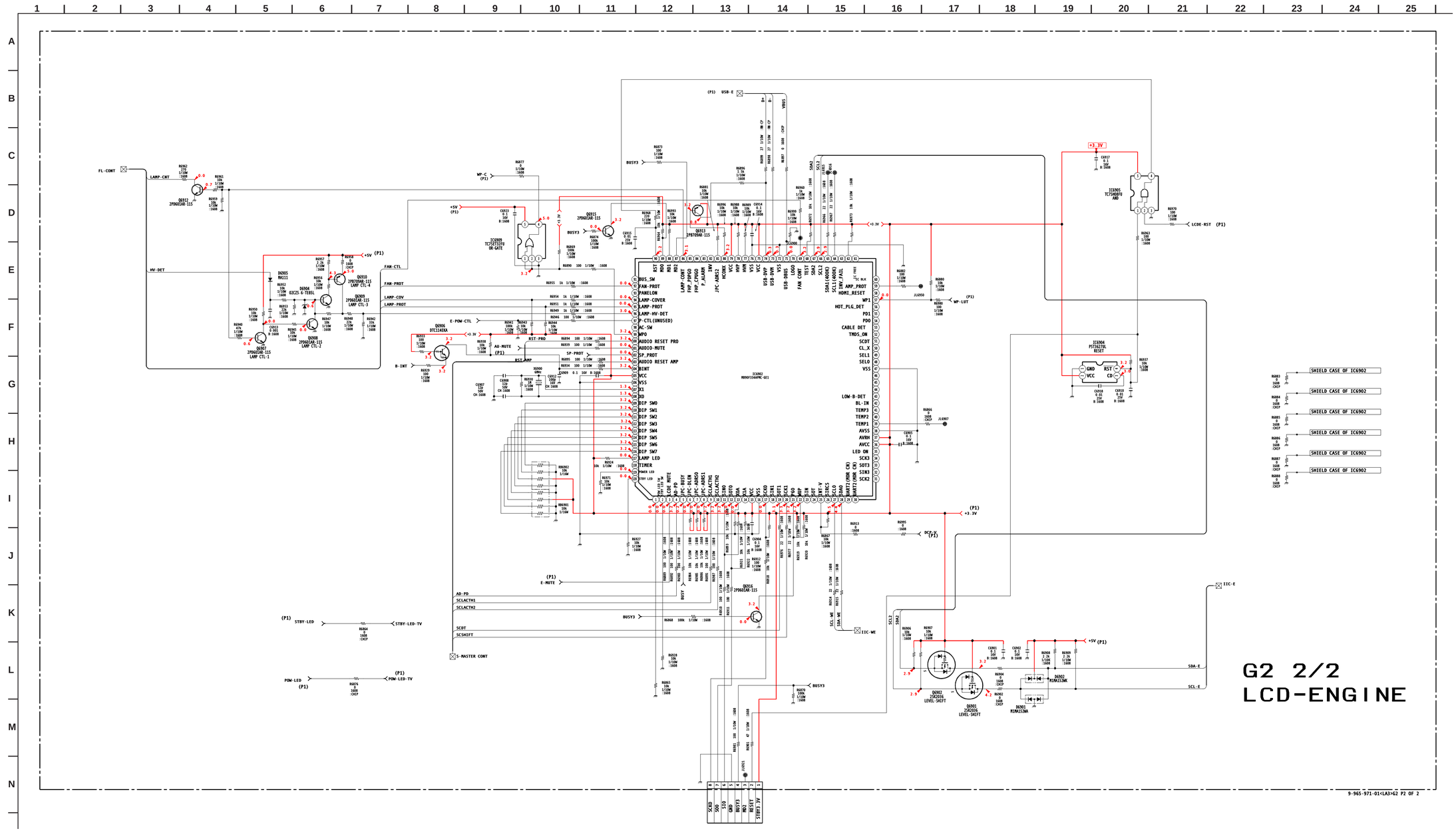

G2 [MAIN I/F, LCD-ENGINE]

COMPONENT SIDE

G2 BOARD LOCATOR LIST COMPONENT SIDE

DIODE		IC		TRANSISTOR	
D6011	I-2	IC6002	I-4	Q6000	G-4
D6013	J-1	IC6003	F-3	Q6001	F-4
D6014	I-1	IC6004	I-6	Q6002	G-4
D6015	J-1	IC6005	I-7	Q6003	F-4
D6020	F-6	IC6006	C-4	Q6005	G-3
D6901	C-7	IC6007	D-4	Q6006	F-3
D6902	C-6	IC6008	I-7	Q6007	C-3
D6904	D-5	IC6010	E-2	Q6008	F-3
		IC6011	D-2	Q6009	C-2
		IC6902	D-7	Q6010	C-2
		IC6904	C-5	Q6011	C-11
		IC6905	D-5	Q6015	J-8
		IC6907	C-4	Q6901	C-6
		IC6908	D-4	Q6902	C-6
		IC6909	D-5	Q6912	D-5
				Q6916	C-7

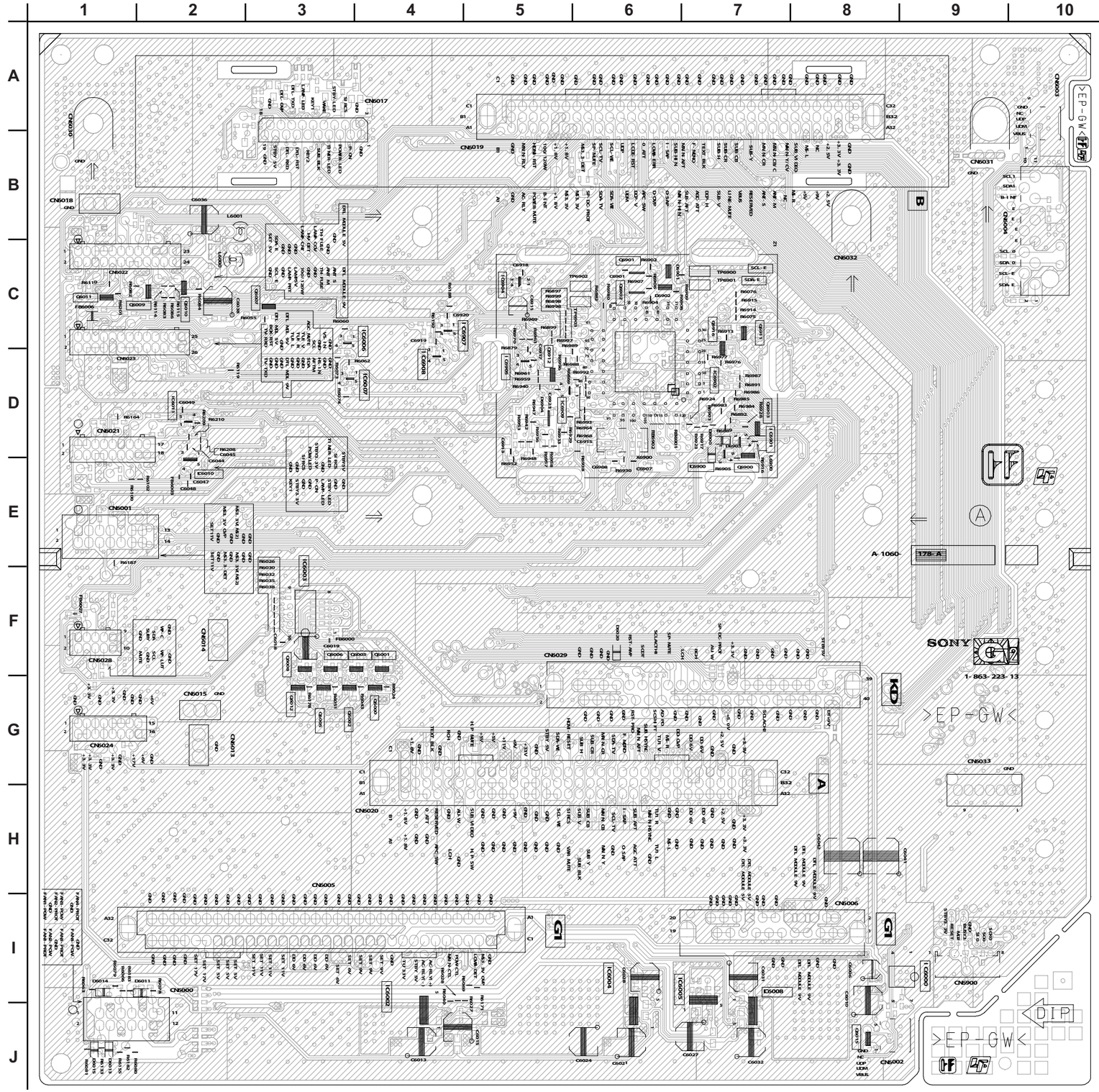

G2 [MAIN I/F, LCD-ENGINE]

CONDUCTOR SIDE

G2 BOARD LOCATOR LIST CONDUCTOR SIDE

DIODE		TRANSISTOR	
D6002	J-6	Q6014	B-8
D6003	J-7	Q6904	A-8
D6004	J-5	Q6905	A-8
D6005	B-5	Q6906	E-5
D6006	J-5	Q6907	D-6
D6007	J-4	Q6908	E-6
D6008	J-4	Q6909	D-6
D6009	J-4	Q6910	E-6
D6012	I-4	Q6913	D-6
D6016	B-5	Q6914	A-7
D6017	B-9	Q6915	D-6
D6018	C-9	Q6917	A-8
D6019	G-6		
D6905	E-6		

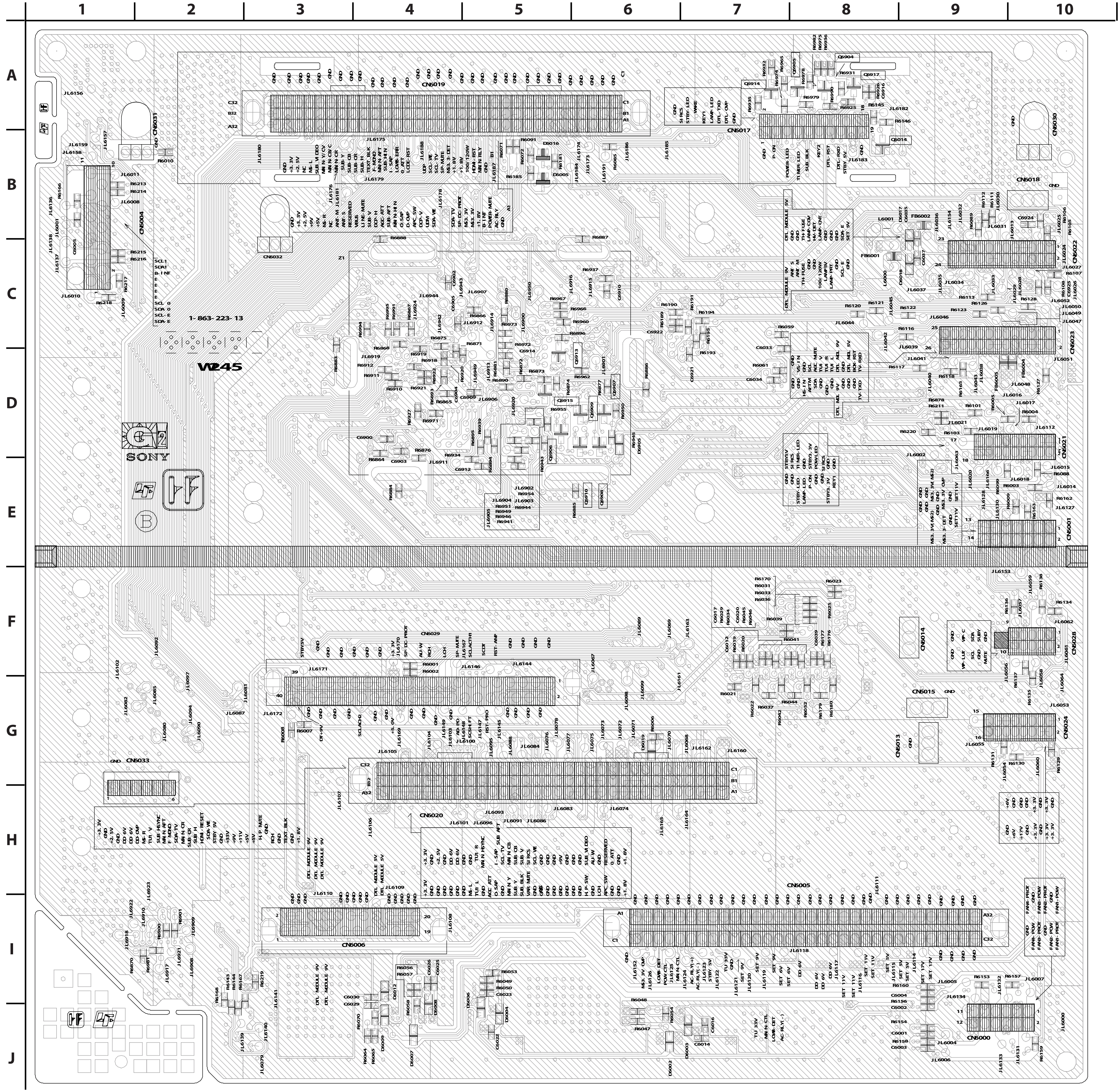

P BOARD SCHEMATIC DIAGRAM

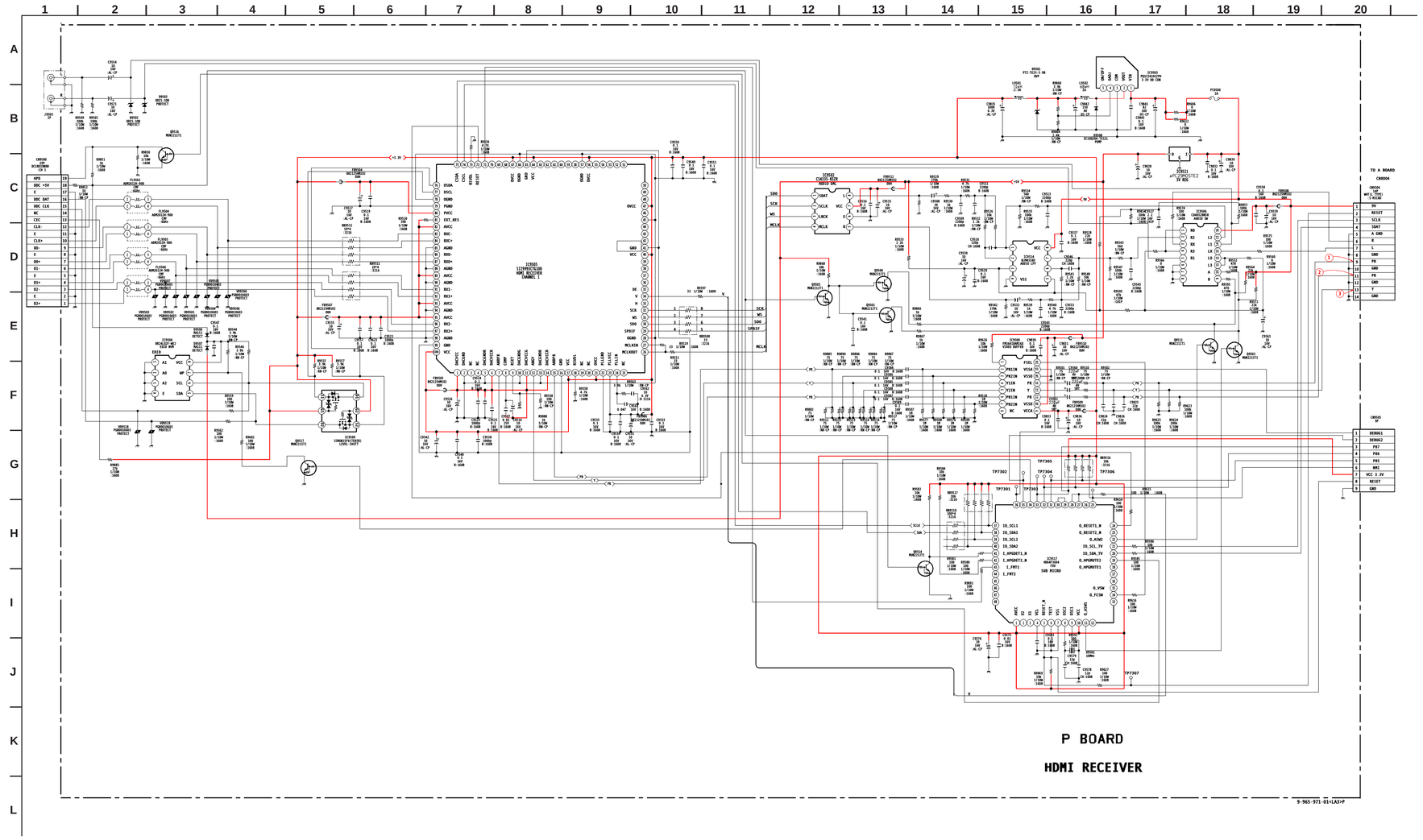

P BFOARD WAVEFORMS

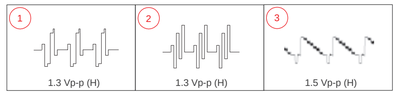

P [HDMI RECEIVER]

COMPONENT SIDE

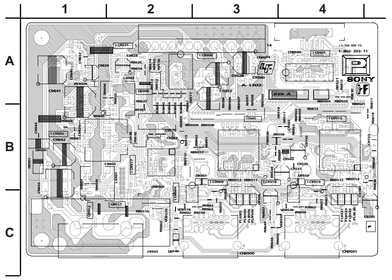

P [HDMI RECEIVER]

CONDUCTOR SIDE

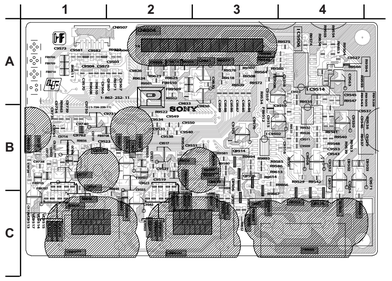

KD BOARD SCHEMATIC DIAGRAM

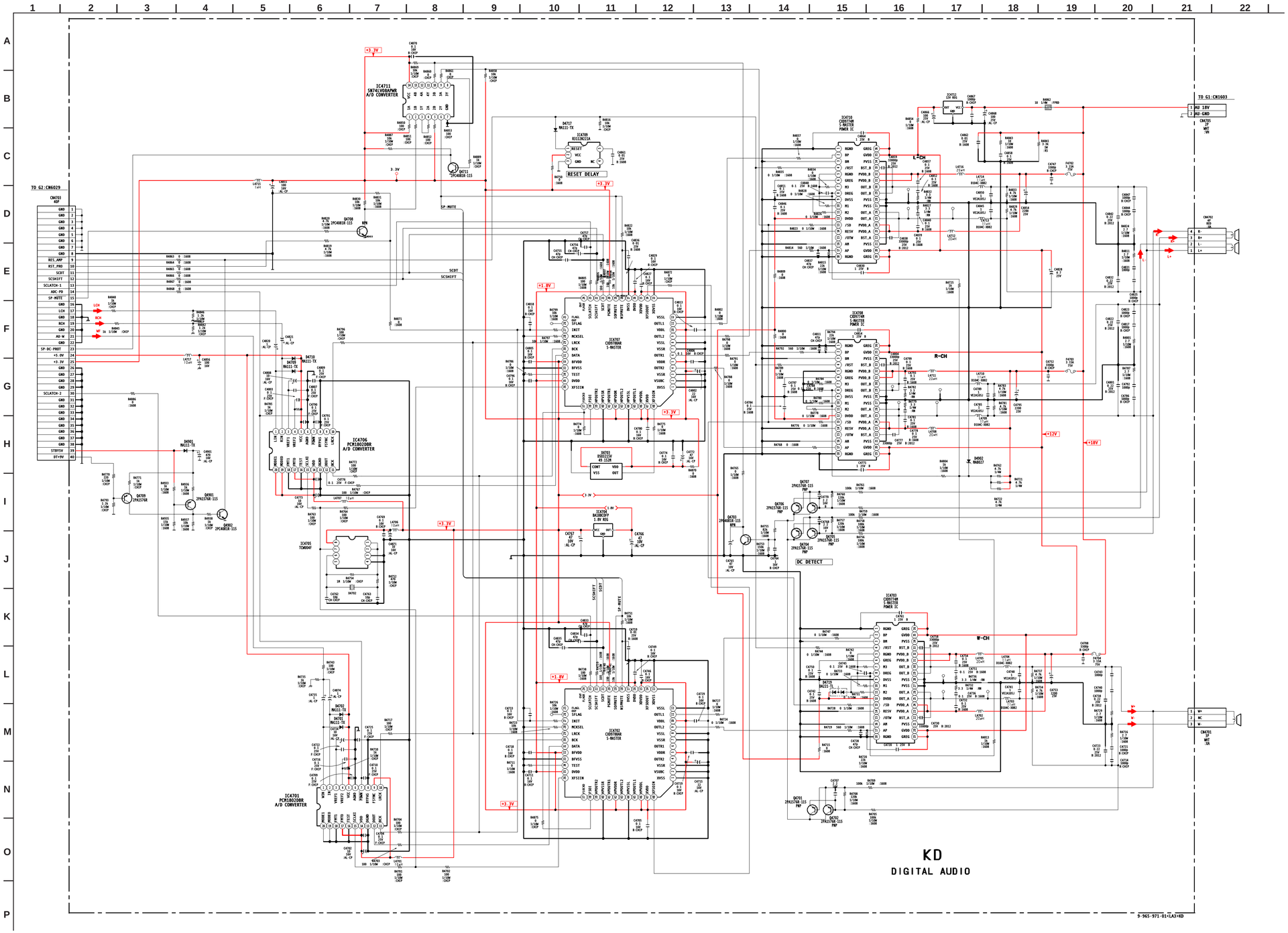

KD [DIGITAL AUDIO]

CONDUCTOR SIDE

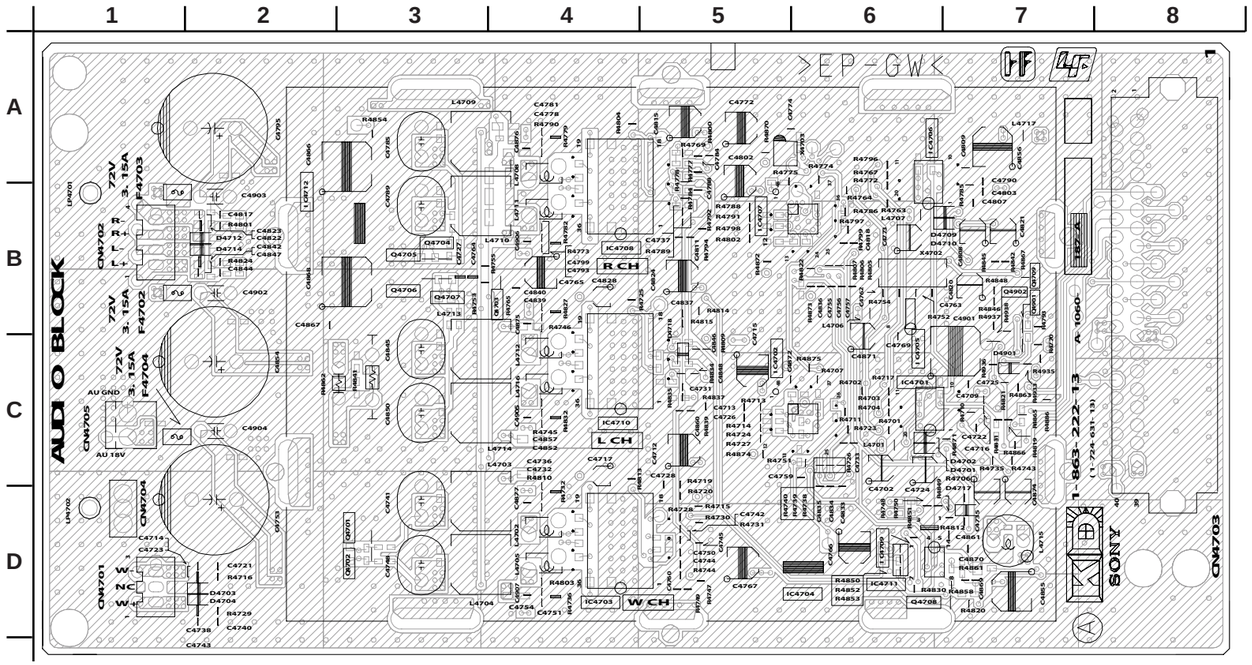

KD [DIGITAL AUDIO]

CONDUCTOR SIDE

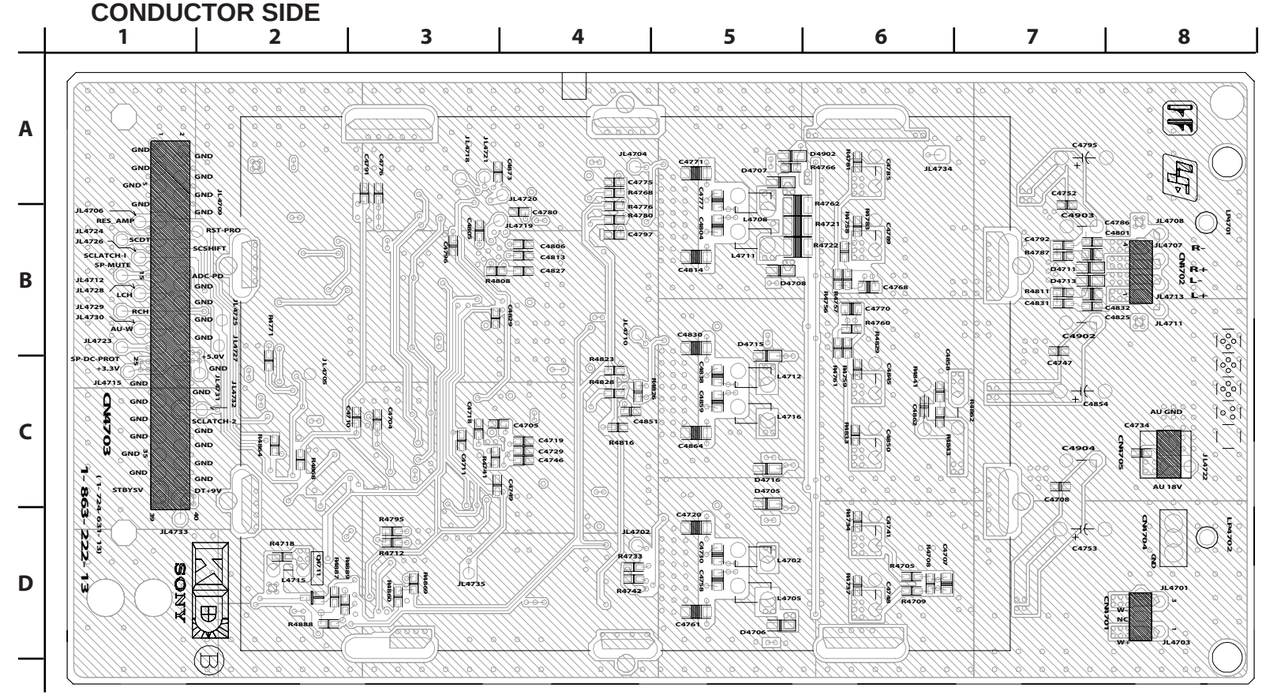

G1 BOARD SCHEMATIC DIAGRAM (1 OF 2)

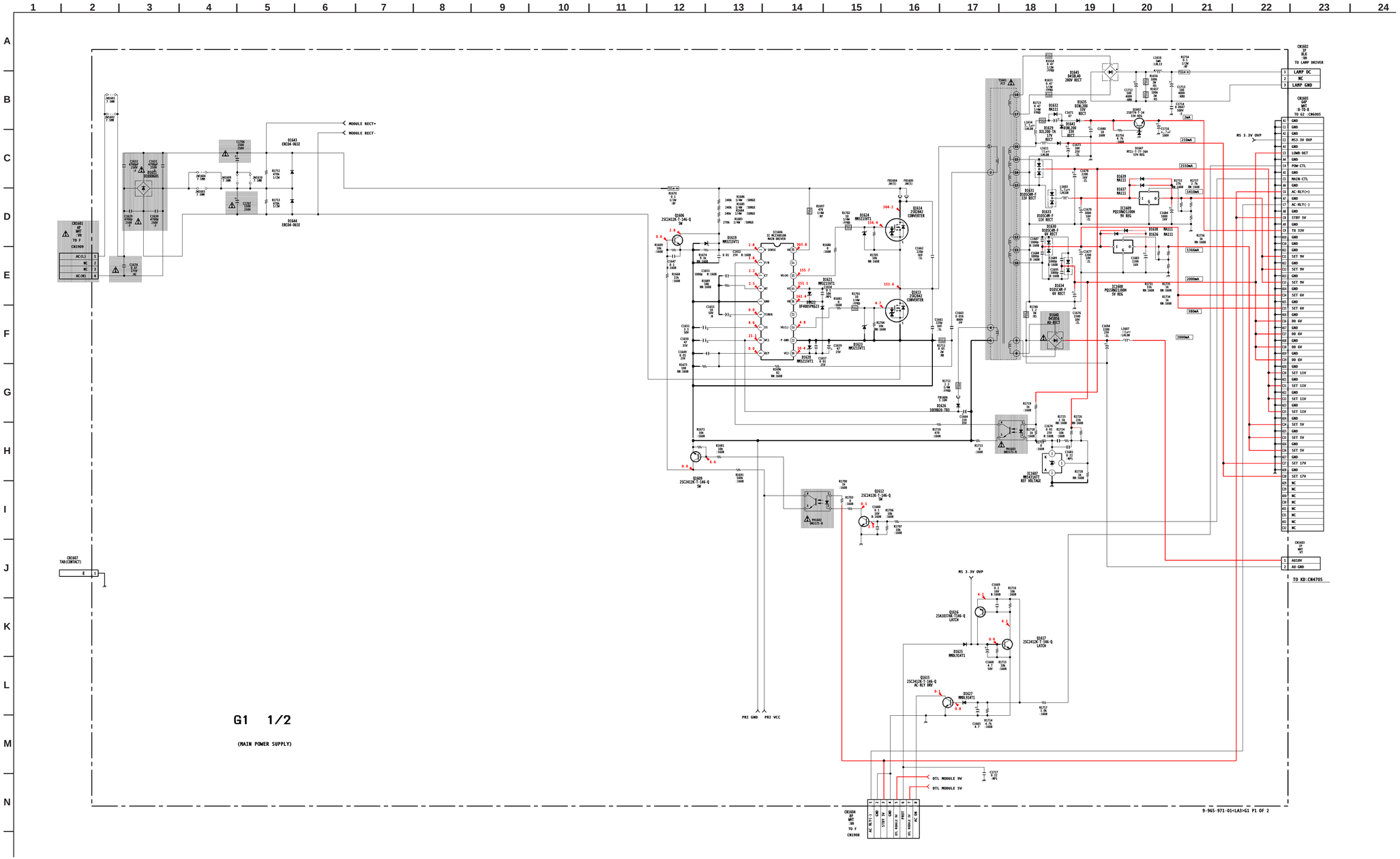

G1 BOARD SCHEMATIC DIAGRAM (2 OF 2)

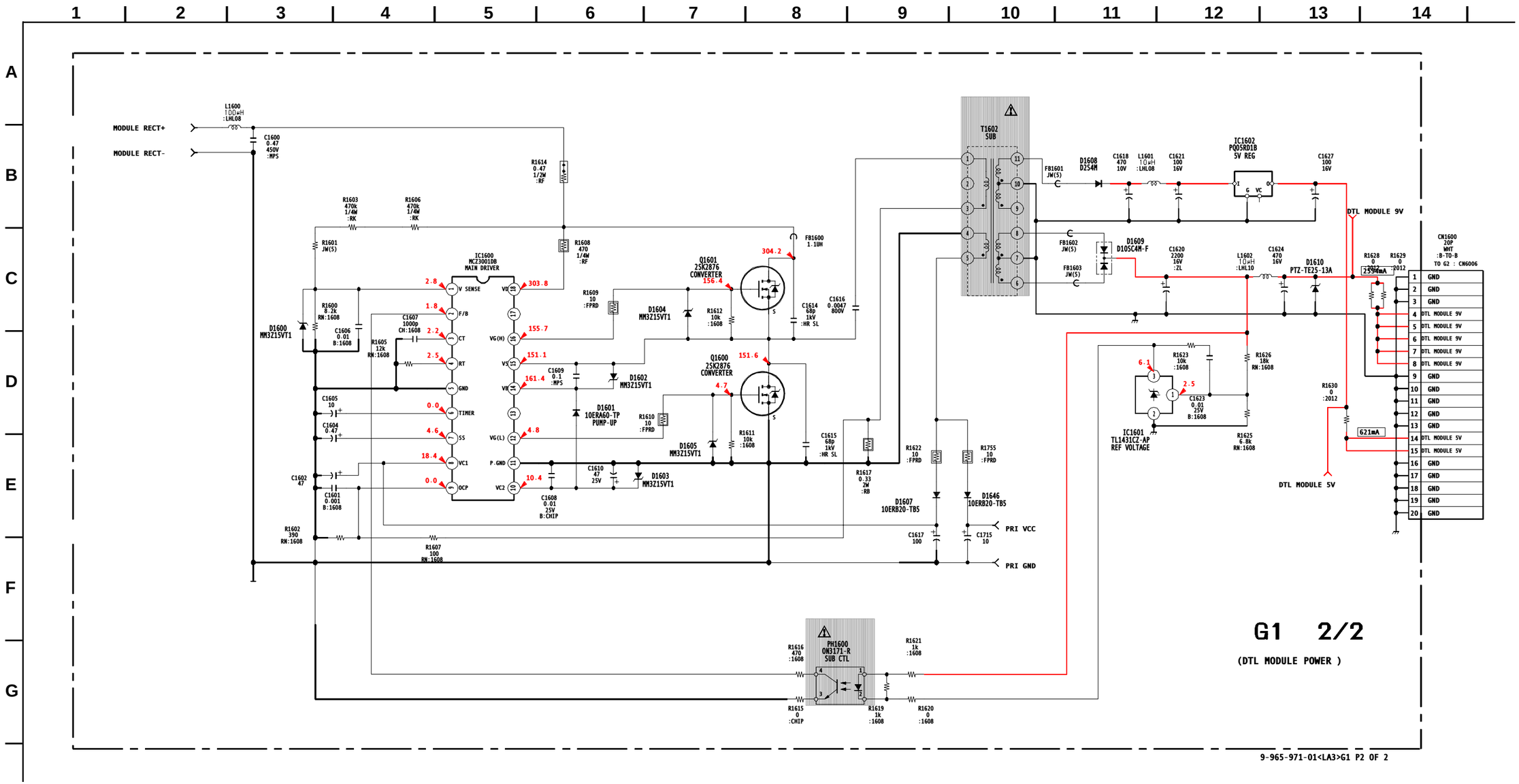

G1 [MAIN POWER SUPPLY, DTL MODULE POWER]

COMPONENT SIDE

G1 BOARD LOCATOR LIST COMPONENT SIDE

DIODE		IC		TRANSISTOR	
D1600	E-9	IC1600	E-8	Q1600	D-8
D1601	D-7	IC1601	G-8	Q1601	E-7
D1607	F-8	IC1602	I-8	Q1602	I-5
D1608	H-8	IC1606	D-4	Q1609	E-4
D1609	G-7	IC1607	F-3	Q1612	E-2
D1610	I-8	IC1608	H-3	Q1613	E-6
D1611	G-9	IC1609	H-5	Q1614	C-6
D1622	D-5			Q1616	I-6
D1625	I-5			Q1617	I-6
D1626	E-4				
D1629	H-5				
D1630	G-2				
D1631	H-3				
D1633	G-4				
D1634	G-3				
D1635	H-5				
D1636	H-2				
D1638	H-2				
D1640	G-2				
D1641	H-5				
D1643	B-9				
D1644	C-9				
D1645	I-6				
D1646	F-6				
D1647	I-5				

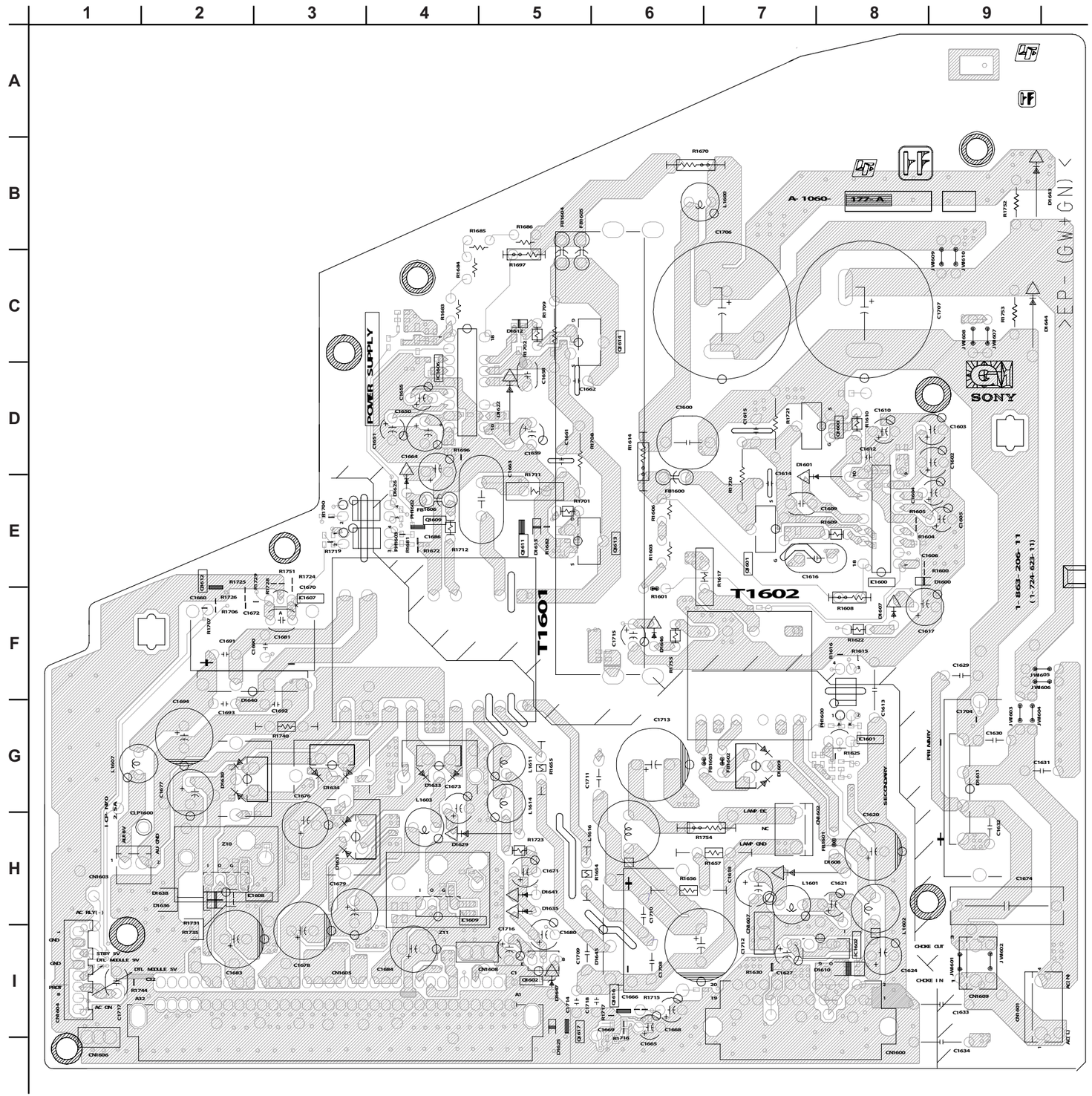

G1 [MAIN POWER SUPPLY, DTL MODULE POWER]

CONDUCTOR SIDE

G1 BOARD LOCATOR LIST CONDUCTOR SIDE

DIODE		IC		TRANSISTOR	
D1601	D-3	IC1600	E-2	Q1600	D-3
D1602	E-3	IC1601	G-3	Q1601	E-4
D1603	D-2	IC1602	H-3	Q1602	I-5
D1604	E-3	IC1606	C-7	Q1606	C-7
D1605	D-3	IC1607	H-7	Q1613	E-5
D1607	F-2	IC1608	H-7	Q1614	C-5
D1608	H-3	IC1609	H-6	Q1615	I-6
D1609	G-3				
D1611	G-2				
D1619	C-6				
D1620	D-6				
D1621	C-6				
D1622	D-6				
D1623	E-5				
D1624	C-5				
D1626	D-7				
D1627	I-5				
D1629	H-6				
D1630	G-8				
D1631	H-7				
D1632	H-6				
D1633	G-6				
D1634	G-7				
D1635	H-6				
D1637	H-7				
D1639	H-7				
D1640	H-8				
D1641	H-5				
D1643	B-1				
D1645	H-5				
D1646	F-4				
D1647	I-5				

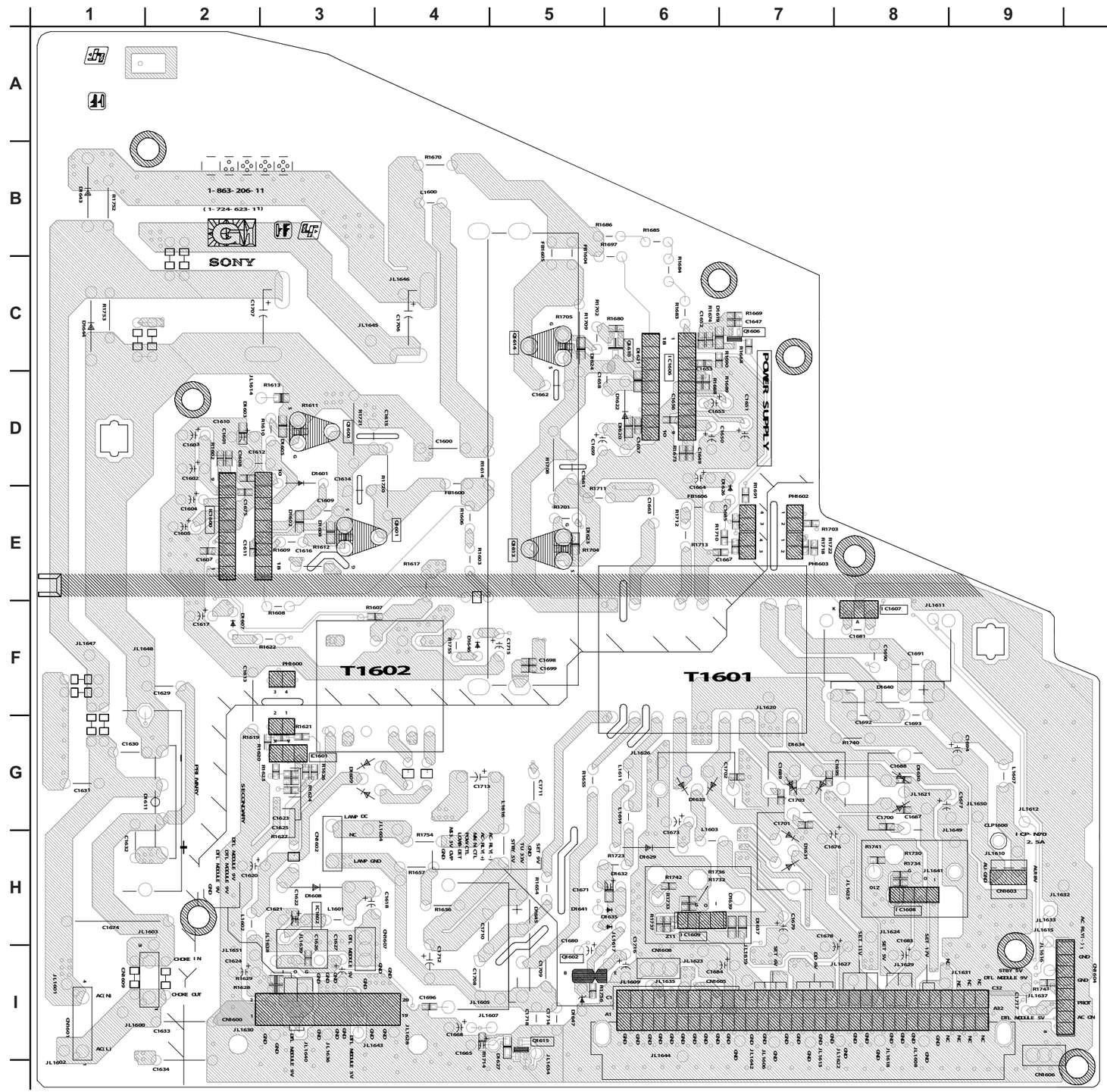

F BOARD SCHEMATIC DIAGRAM

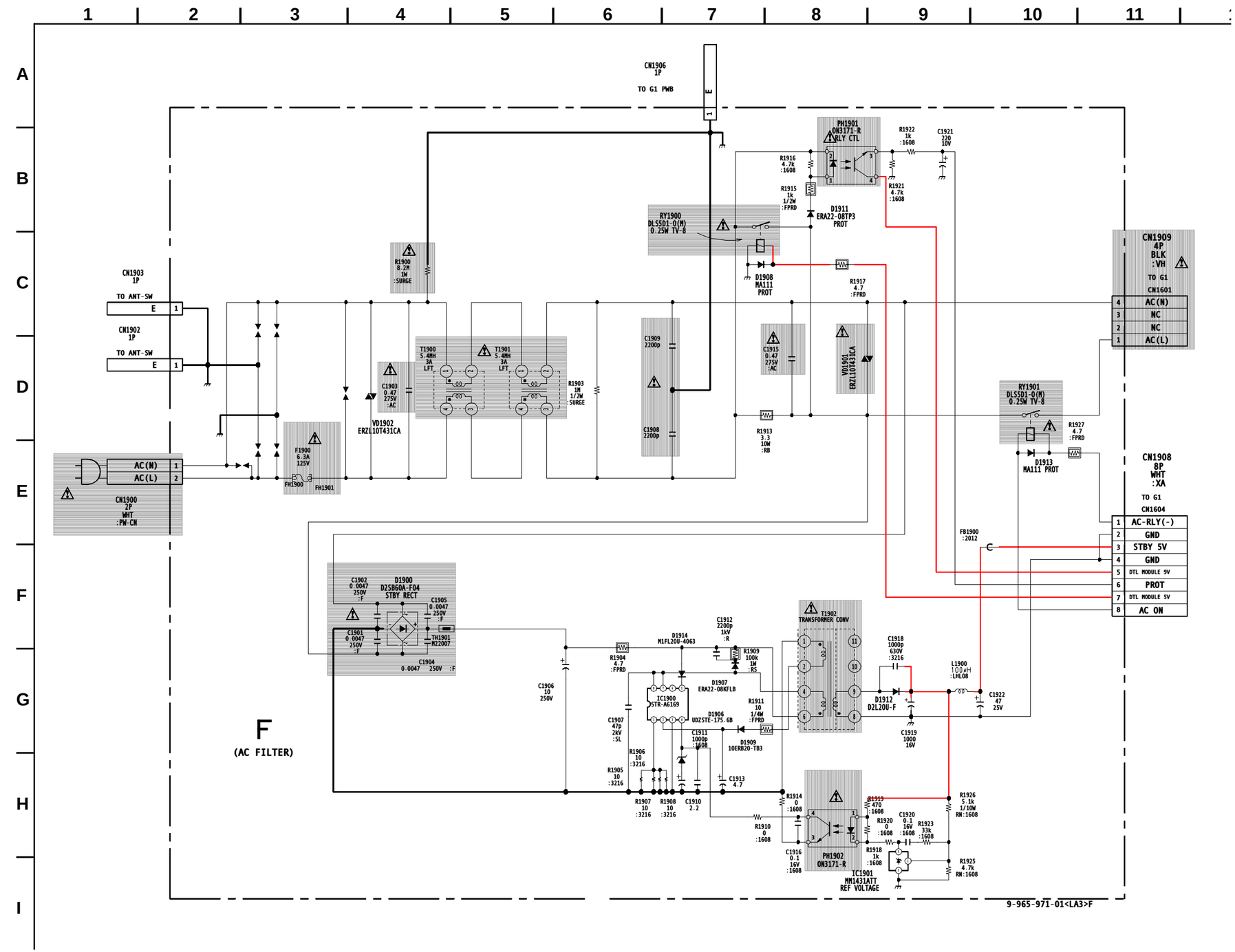

F [AC FILTER]

COMPONENT SIDE

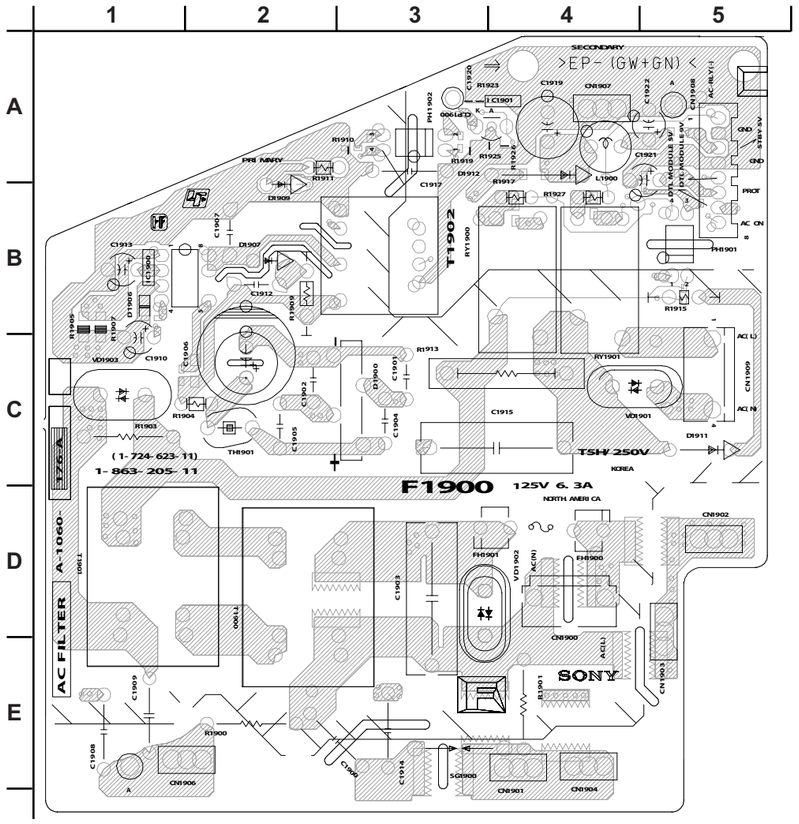

F [AC FILTER]

CONDUCTOR SIDE

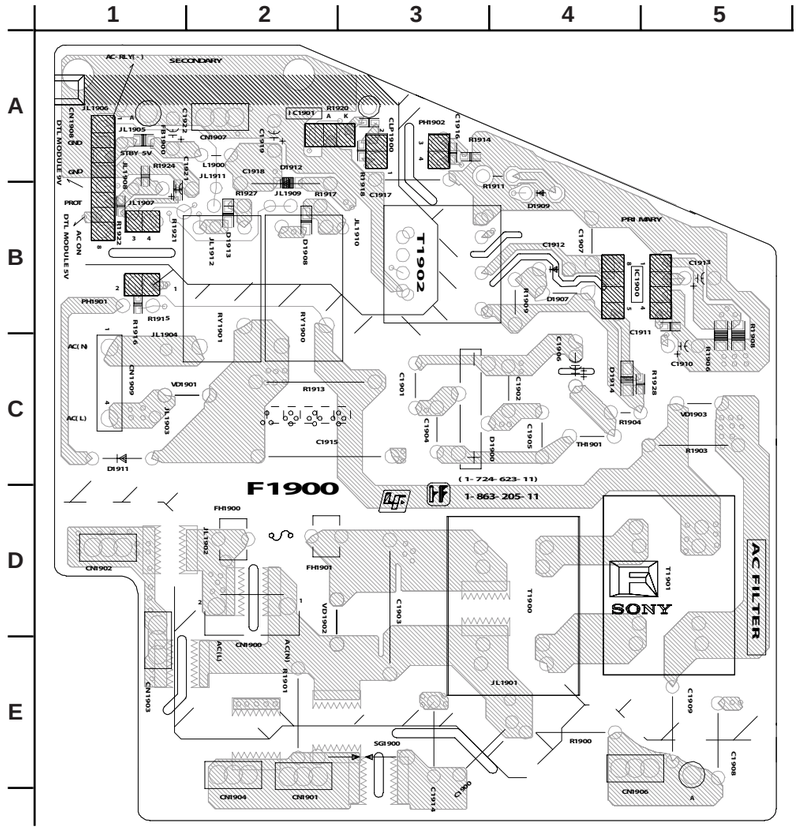

HM BOARD SCHEMATIC DIAGRAM

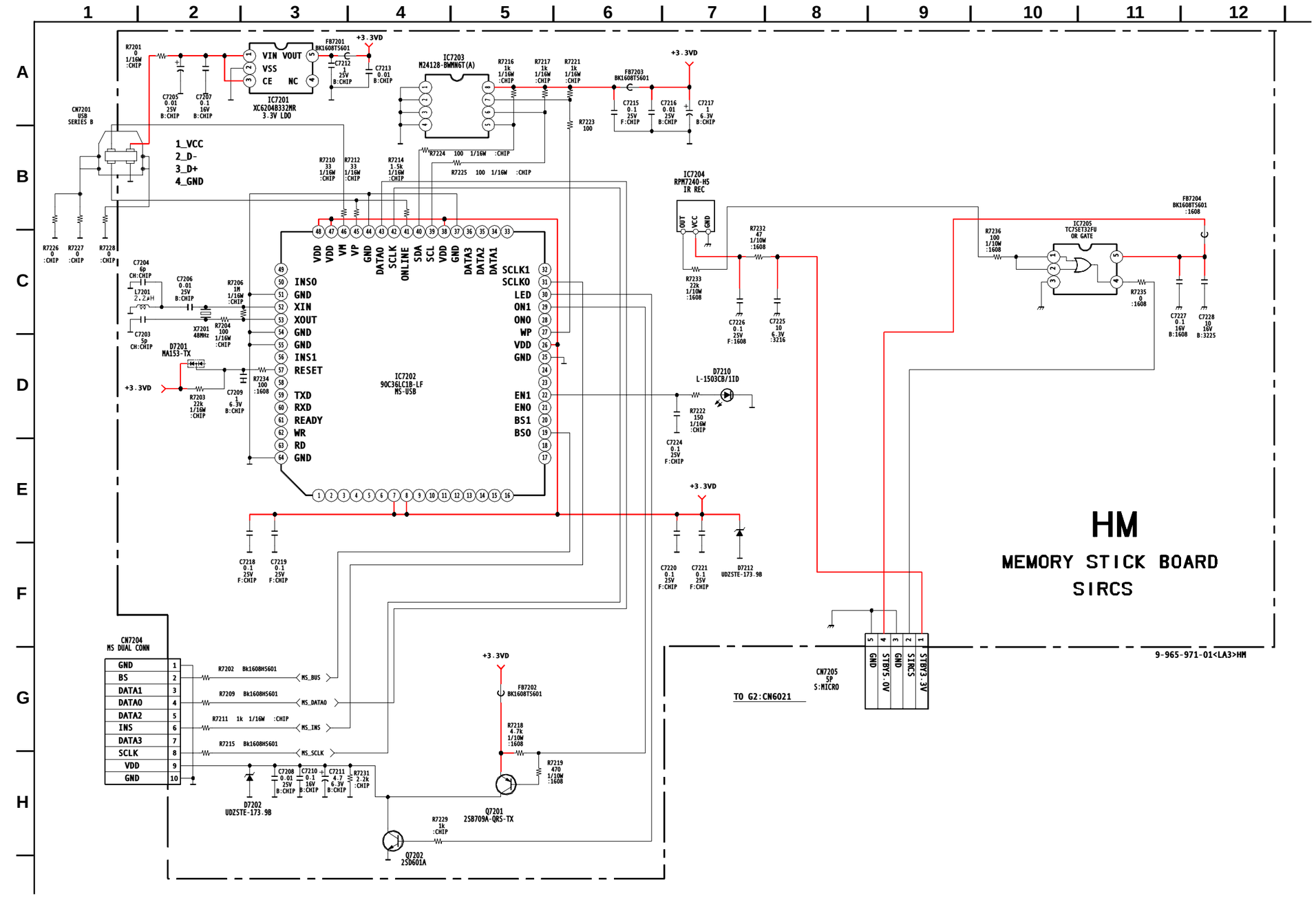

HM [MEMORY STICK BOARD, SIRCS]

COMPONENT SIDE

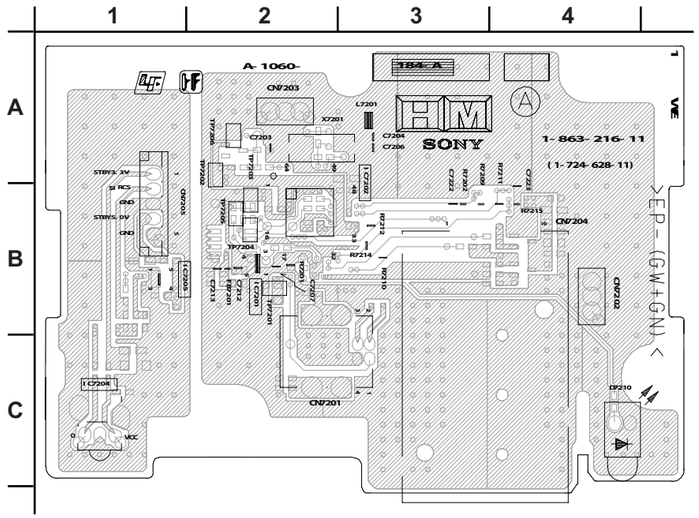

HM [MEMORY STICK BOARD, SIRCS]

CONDUCTOR SIDE

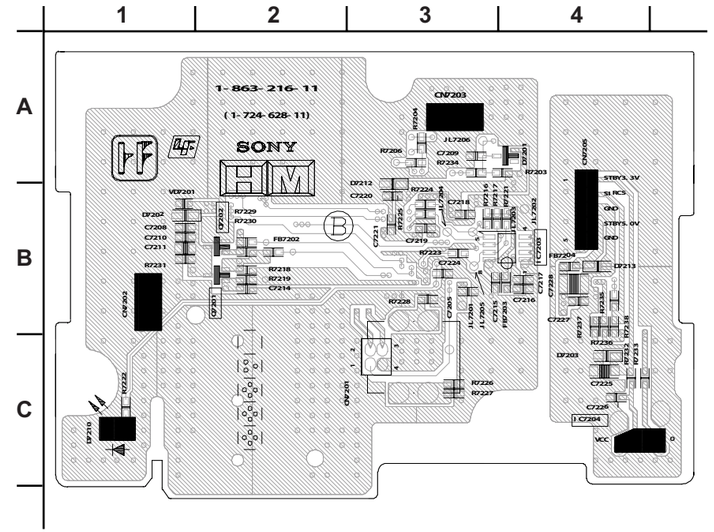

H1 BOARD SCHEMATIC DIAGRAM

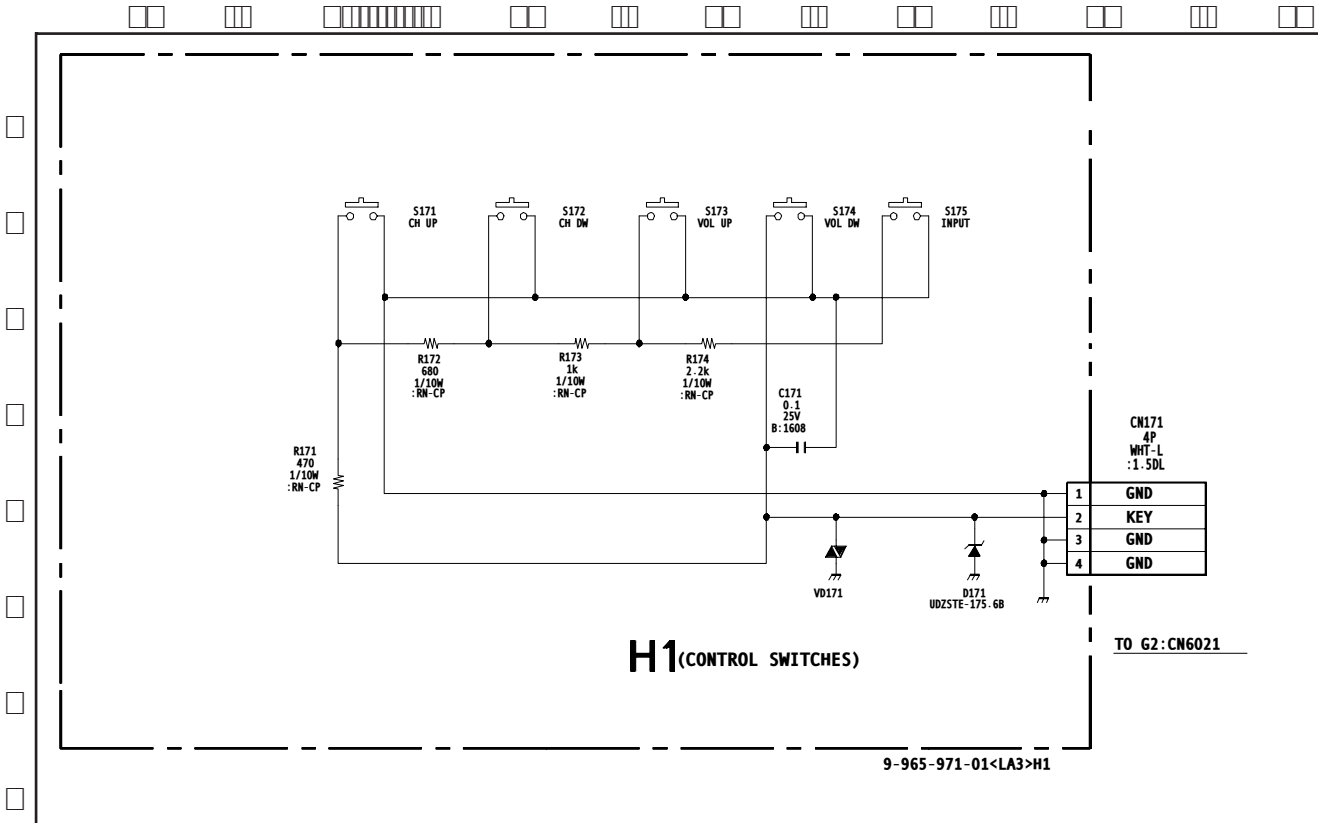

H1 [CONTROL SWITCHES]

COMPONENT SIDE

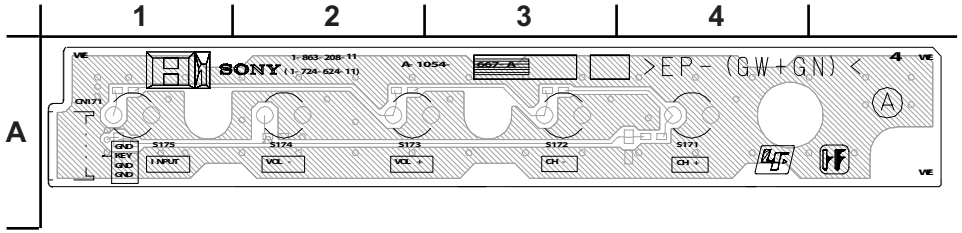

H1 [CONTROL SWITCHES]

CONDUCTOR SIDE

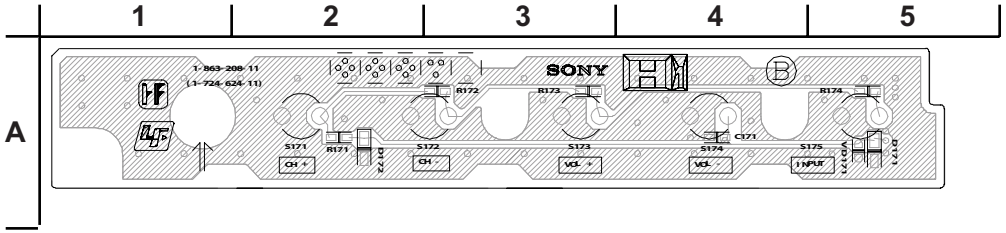

H2 BOARD SCHEMATIC DIAGRAM

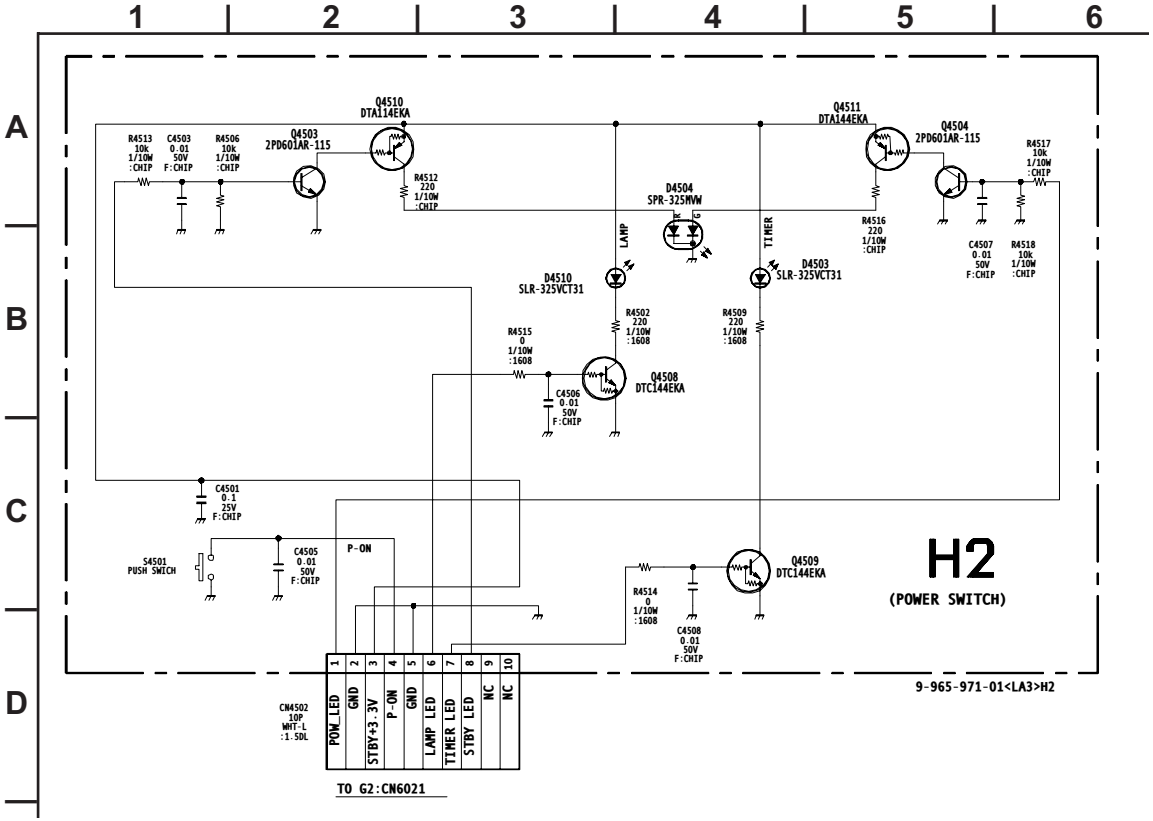

H2 [POWER SWITCH]

COMPONENT SIDE

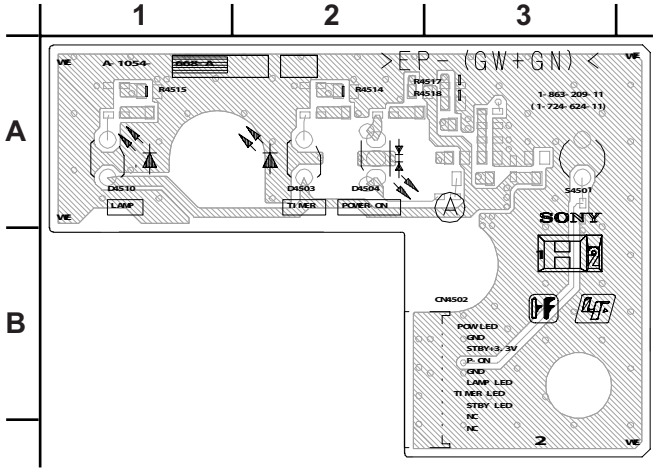

H2 [POWER SWITCH]

CONDUCTOR SIDE

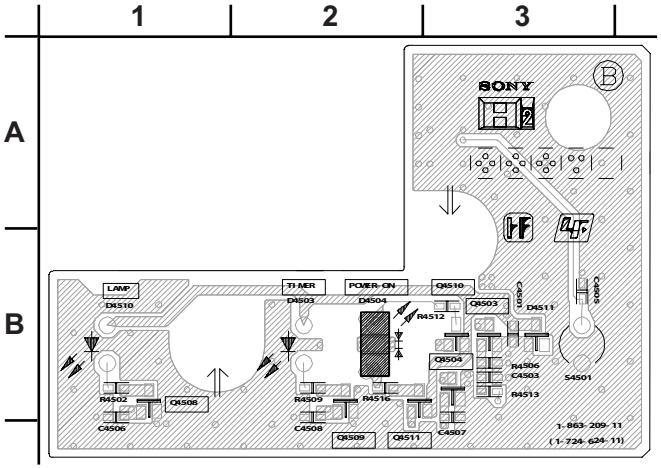

H3 BOARD SCHEMATIC DIAGRAM

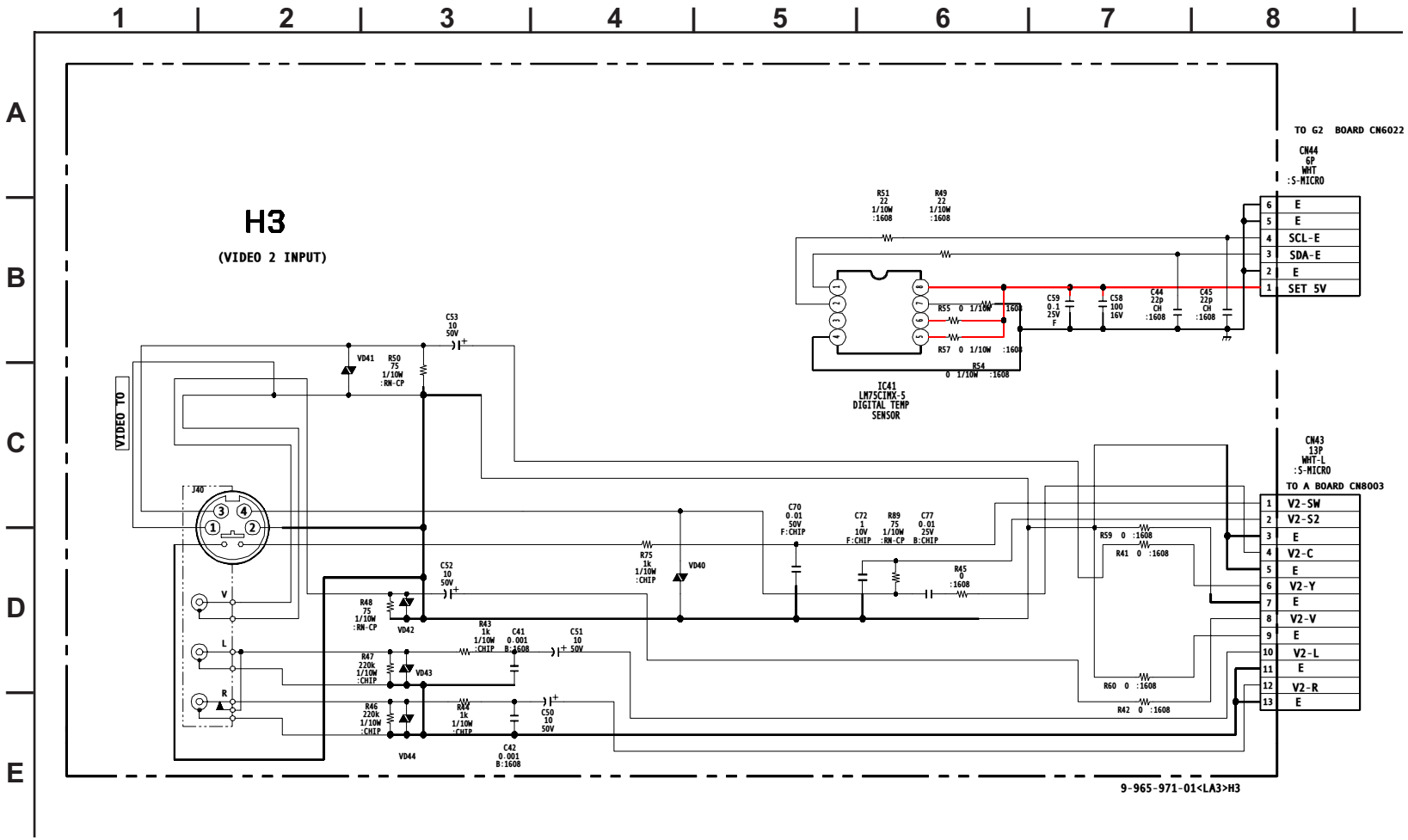

H3 [VIDEO 2 INPUT]

COMPONENT SIDE

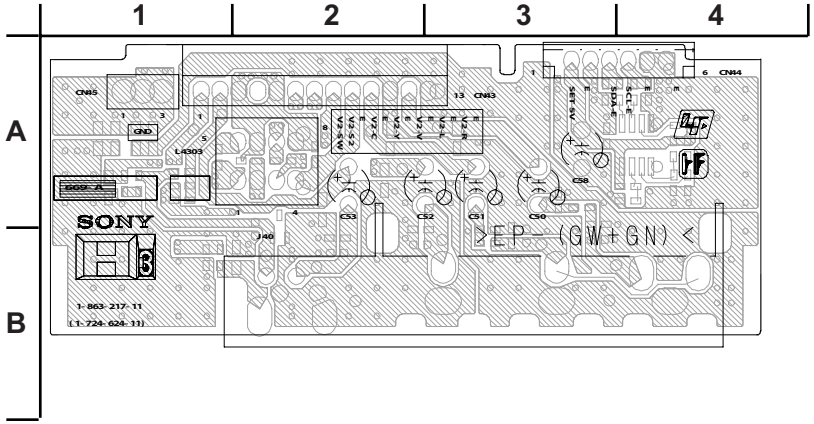

H3 [VIDEO 2 INPUT]

CONDUCTOR SIDE

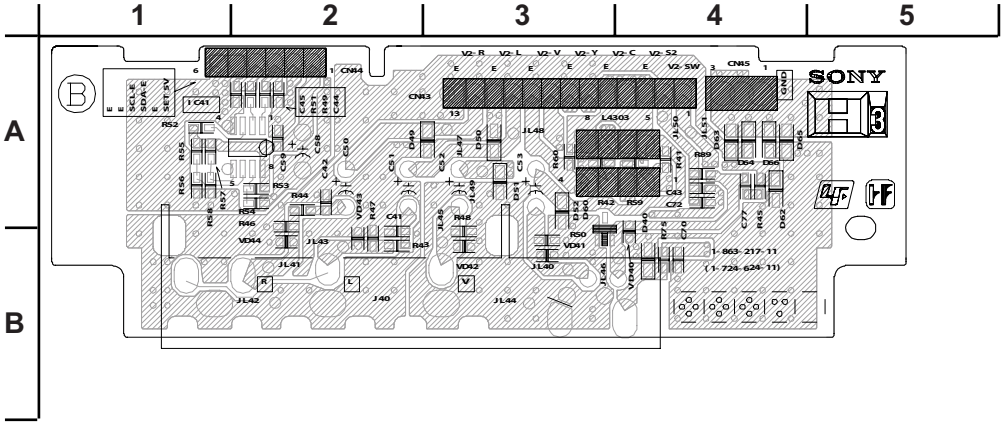

T BOARD SCHEMATIC DIAGRAM

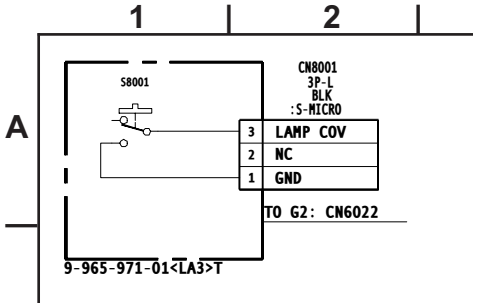

T [LAMP DOOR SWITCH]

COMPONENT SIDE

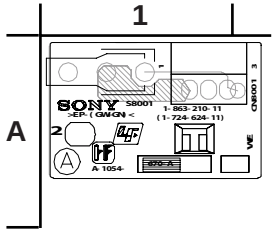

T [LAMP DOOR SWITCH]

CONDUCTOR SIDE

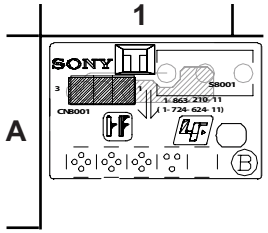

U BOARD SCHEMATIC DIAGRAM

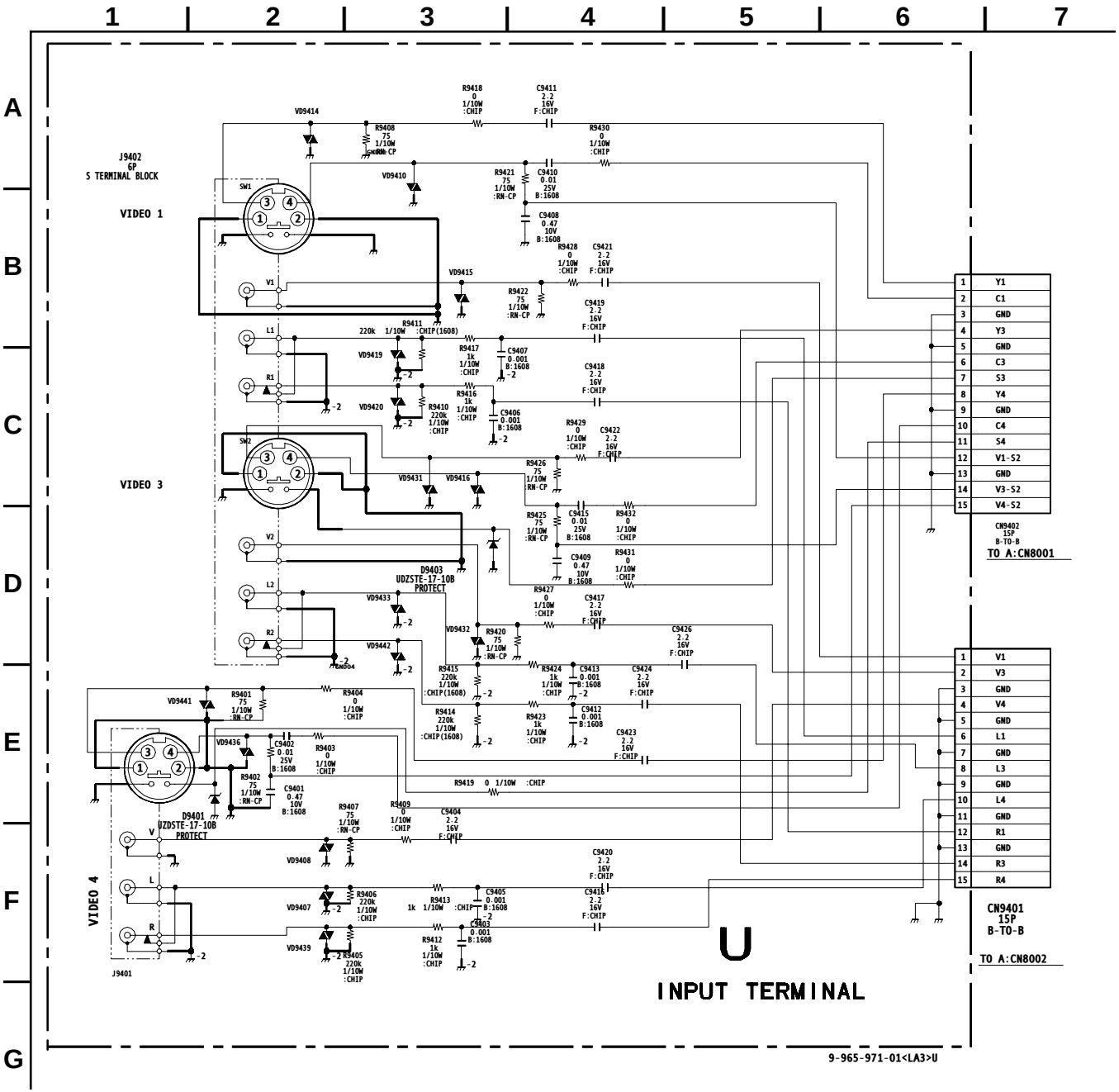

U [INPUT TERMINAL]

COMPONENT SIDE

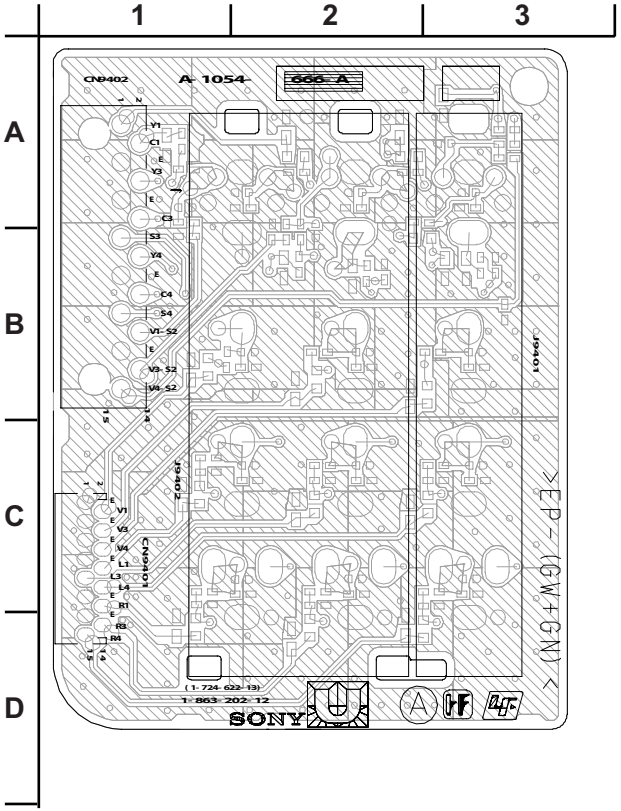

U [INPUT TERMINAL]

COMPONENT SIDE

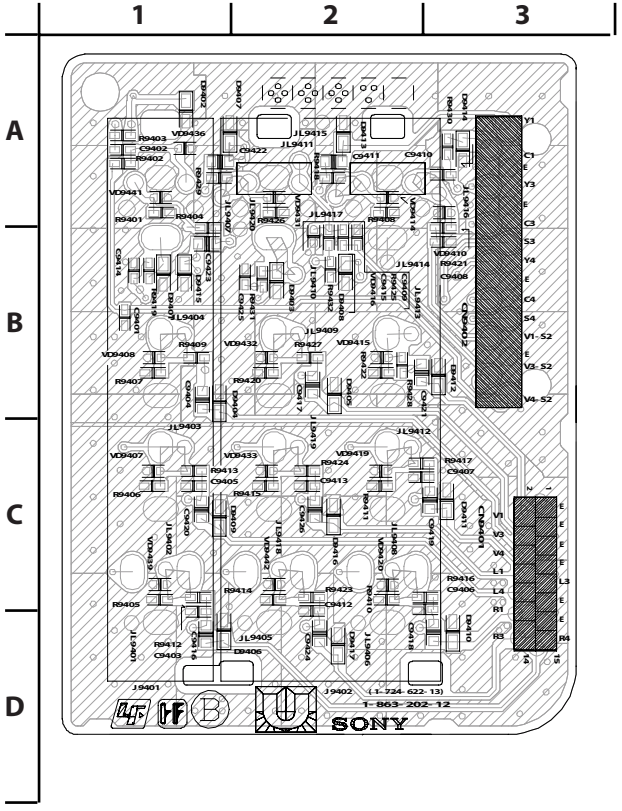

3-5. SEMICONDUCTORS

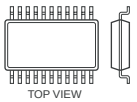

16Pin

CXA2069Q
NJW1149

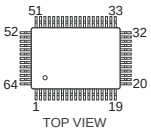

CXA2171AQ-T6

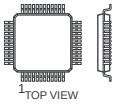

48Pin

LM75CIMX-5
M24C02-WMN6T(A)
M24C16-WMN6T(A)
MAX4451EKA-TG069
NJM4558V-TE2

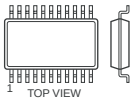

8Pin

M52055FP

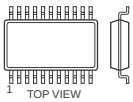

14Pin

MCZ3001DA

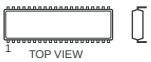

18Pin

NJM78M12DL1A-TE2

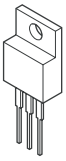

NJM79M12DL1A-TE1

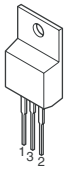

PQ07VZ012ZP

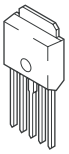

PQ30RV11
PQ30RV21
PQ30RV31

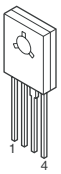

SN74CBTLV1G125DCKR

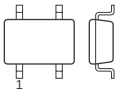

5Pin

TDA7265

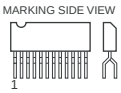

11Pin

TDA7296

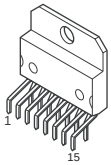

UPC1093J-1-T

2SA1162-G
2SA1576A-T106-R
2SA1611-M5M6
2SC1623-L5L6
2SC4081-R
2SD601A-Q
DTA114EKA-T146
DTC114EK
DTC114EU
DTC143EKA-T146
DTC144EKA
DTC144EUA-T146

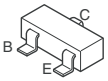

2SK2663

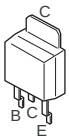

D10SC6M

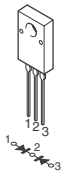

D1N20R
D1NS4
RD12SB2
RD18SB2
RD3.3SB2

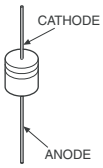

D1NL20J-TR

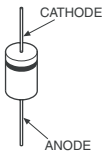

D2SB60A-F04
D4SBL40
D4SBS6-F
D6SB60L

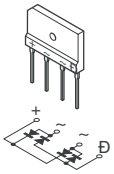

DAP202K
M1MA152WK-T1

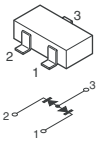

DE5SC3ML

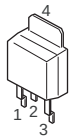

DTZ10B
HZU11B1TRF
MA111-TX
MA113-(TX)
UDZS-TE17-5.6B
UDZ-TE-17-4.3B
UDZ-TE-17-8.2B

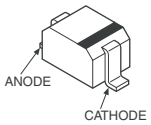

ERA22-08
ERC04-06SE

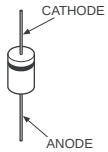

RD5.6SB2-T1
RD6.2SB2-T1
RD7.5SB2-T1

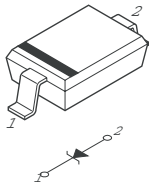

SLR-325VCT31

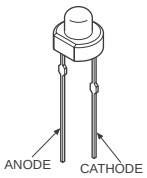

SECTION 4: EXPLODED VIEWS

Components not identified by a part number or description are not stocked because they are seldom required for routine service.

The component parts of an assembly are indicated by the reference numbers in the far right column of the parts list and within the dotted lines of the diagram.

* Items marked with an asterisk are not stocked since they are seldom required for routine service. Expect some delay when ordering these components.

NOTE: The components identified by shading and ⚠ mark are critical for safety. Replace only with part number specified.

NOTE: Les composants identifies per un trame et une marque ⚠ sont critiques pour la securite. Ne les remplacer que par une piece portant le numero specifie.

4-1. COVER

■	7-685-648-79	SCREW +BVTP 3X12 TYPE2 IT-3
●	7-685-663-79	SCREW +BVTP 4X16 TYPE2 TT(B)
★	7-682-948-01	SCREW +PSW 3X8
○	7-685-661-14	SCREW +BVTP 4X12 TYPE2 IT-3

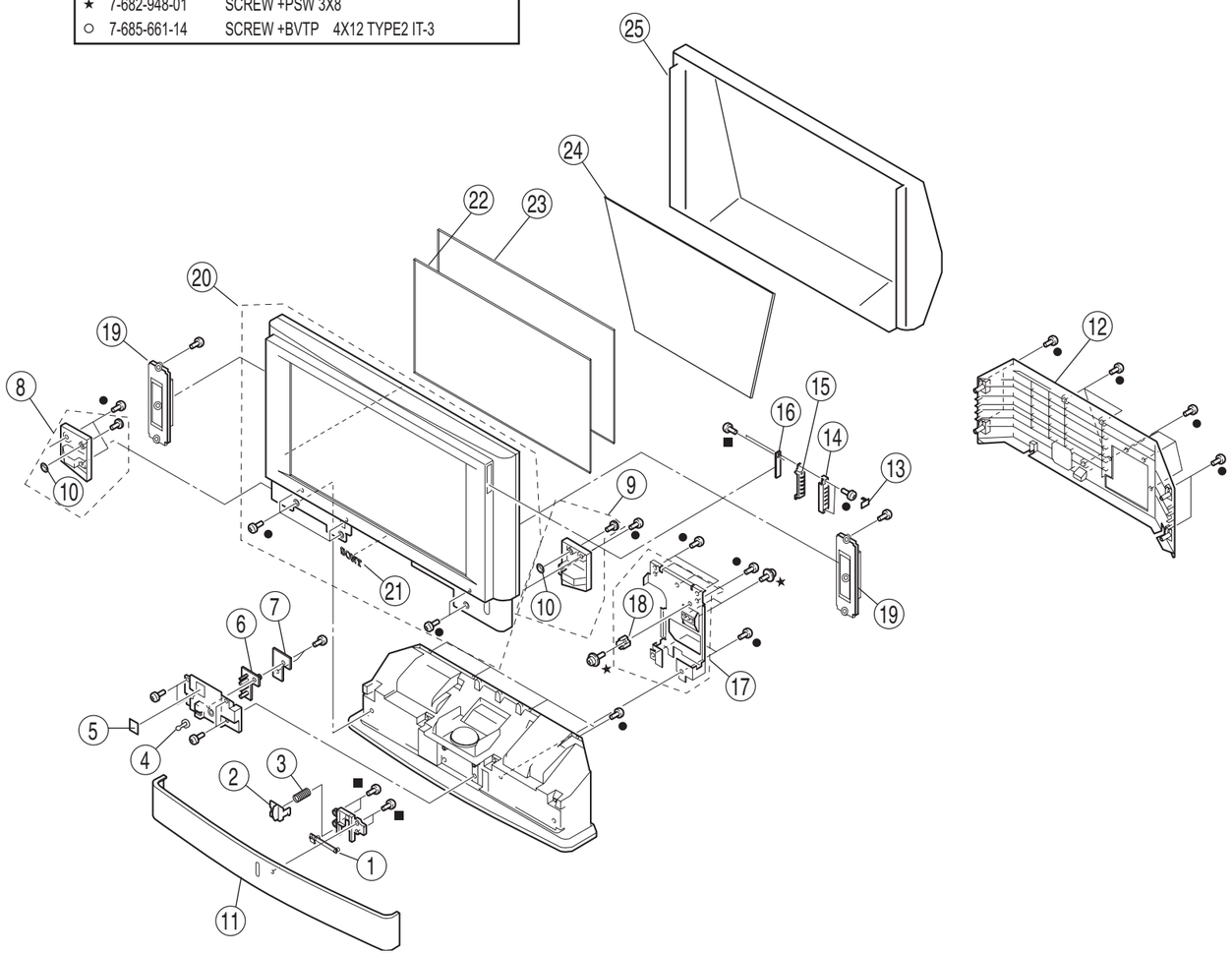

	REF. NO.	PART NO.	DESCRIPTION	[ASSEMBLY INCLUDES]
*	1	2-021-311-11	FILTER, REMOTE	
	2	4-094-706-01	BUTTON, POWER	
	3	4-036-405-01	SPRING, COMPRESSION	
	4	4-092-219-01	STRIKE	
	5	4-097-613-01	SHEET, H2	
	6	4-094-707-02	GUIDE (LED), LIGHT	
	7	A-1054-668-A	H2 BOARD, MOUNTED	
	8	X-2021-549-1	CAP (L) ASSY, REAR (KDF-42WE655 ONLY)	[10]
	8	X-2021-557-1	CAP (L) ASSY, REAR (KDF-50WE655 ONLY)	[10]
	9	X-2021-548-1	CAP (R) ASSY, REAR (KDF-42WE655 ONLY)	[10]
	9	X-2021-556-1	CAP (R) ASSY, REAR (KDF-50WE655 ONLY)	[10]
*	10	3-650-537-00	WASHER	
	11	X-2021-546-1	COVER ASSY (42), FRONT ** (KDF-42WE655 ONLY)	
	11	X-2021-841-1	COVER ASSY (42), FRONT ** (KDF-42WE655 ONLY)	
	11	X-2021-555-2	COVER ASSY (50), FRONT ** (KDF-50WE655 ONLY)	
	11	X-2021-843-1	COVER ASSY (50), FRONT ** (KDF-50WE655 ONLY)	
	12	2-148-637-01	COVER, REAR **	
	12	4-103-431-01	COVER, REAR **	
	13	4-094-713-31	CAP, H1 BRACKET	
	14	4-094-711-31	BRACKET, H1 (KDF-42WE655 ONLY)	
	15	4-094-712-01	BUTTON, H1 (KDF-42WE655 ONLY)	

REF. NO.	PART NO.	DESCRIPTION	[ASSEMBLY INCLUDES]
16	A-1054-667-A	H1 BOARD, MOUNTED	
17	X-2021-547-1	BRACKET ASSY, FRONT (KDF-42WE655 ONLY)	[18]
17	X-2021-558-1	BRACKET ASSY, FRONT (KDF-50WE655 ONLY)	[18]
18	4-077-652-01	CUSHION (A)	
19	1-825-961-11	LOUDSPEAKER (13X7CM) (KDF-42WE655 ONLY)	
20	A-1087-045-A	SCREEN FRAME ASSY (IRP) (KDF-42WE655 ONLY)	[21]
20	A-1087-047-A	SCREEN FRAME ASSY(IRP) (KDF-50WE655 ONLY)	[21]
21	3-704-179-01	EMBLEM (NO.9), SONY	
22	1-788-197-41	PLATE (42L), DIFFUSION*** (KDF-42WE655 ONLY)	
22	1-788-159-21	PLATE (50L), DIFFUSION (KDF-50WE655 ONLY)	
23	1-788-196-41	PLATE (42F), DIFFUSION*** (KDF-42WE655 ONLY)	
23	1-788-162-21	PLATE (50F), DIFFUSION (KDF-50WE655 ONLY)	
	7-632-661-51	BLACK ACETATE (2142) 23X50M TAPE FOR DIFFUSION PLATES (NOT SHOWN)	
24	A-1087-015-A	MIRROR (42) ASSY (IRP) (KDF-42WE655 ONLY)	
24	A-1087-018-A	MIRROR (50) ASSY(IRP) (KDF-50WE655 ONLY)	
25	A-1087-046-A	MIRROR COVER ASSY (IRP) (KDF-42WE655 ONLY)	
25	A-1087-048-A	MIRROR COVER ASSY(IRP) (KDF-50WE655 ONLY)	

**These items are manufactured at different facilities. Either part can be used as a replacement.

***Caution:
The Diffusion Plates for the 42" model need to be replaced as a set, therefore if either of the Diffusion Plates needs to be replaced you must order both plates.

NOTE: The components identified by shading and ⚠ mark are critical for safety. Replace only with part number specified.

NOTE: Les composants identifies per un trame et une marque ⚠ sont critiques pour la securite. Ne les remplacer que par une piece portant le numero specifie.

4-2. BOTTOM CABINET (KDF-42WE655 ONLY)

■	7-685-648-79	SCREW +BVTP 3X12 TYPE2 IT-3
●	7-685-663-79	SCREW +BVTP 4X16 TYPE2 TT(B)
□	7-685-167-19	SCREW +P 4X35 TYPE2 NON-SLIT

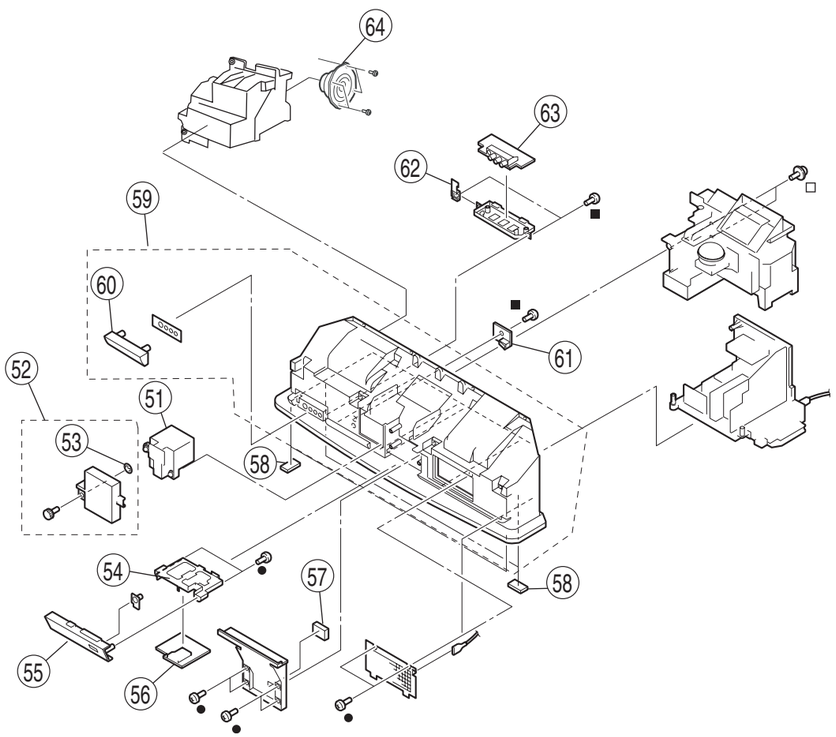

	REF. NO.	PART NO.	DESCRIPTION	[ASSEMBLY INCLUDES]
⚠	*51	A-1606-034-B	LAMP BLOCK (RP) ASSY	
	52	X-2021-543-1	DOOR ASSY, LAMP	[53]
*	53	3-650-537-00	WASHER	
*	54	2-021-132-01	BRACKET, MS	
	55	X-2024-961-1	PANEL ASSY, MS	
	56	A-1060-184-A	HM BOARD, COMPLETE	
	57	4-096-431-01	CUSHION (SP), SHIELD	
	58	4-097-548-01	CUSHION, FOOT	
	59	X-2021-542-1	CABINET ASSY (42), BOTTOM **	[60]
	59	X-2023-247-1	CABINET ASSY (42), BOTTOM **	[60]

REF. NO.	PART NO.	DESCRIPTION	[ASSEMBLY INCLUDES]
60	4-094-721-03	DOOR, H3	
61	A-1054-670-A	T BOARD, MOUNTED	
62	4-094-757-01	SPRING, PLATE	
63	A-1054-669-A	H3 BOARD, MOUNTED	
64	1-825-960-11	LOUDSPEAKER (13CM)	

**These items are manufactured at different facilities. Either part can be used as a replacement.

NOTE: The components identified by shading and ⚠ mark are critical for safety. Replace only with part number specified.

NOTE: Les composants identifies per un trame et une marque ⚠ sont critiques pour la securite. Ne les remplacer que par une piece portant le numero specifie.

4-3. BOTTOM CABINET (KDF-50WE655 ONLY)

■	7-685-648-79	SCREW +BVTP 3X12 TYPE2 IT-3
●	7-685-663-79	SCREW +BVTP 4X16 TYPE2 TT(B)
□	7-685-167-19	SCREW +P 4X35 TYPE2 NON-SLIT

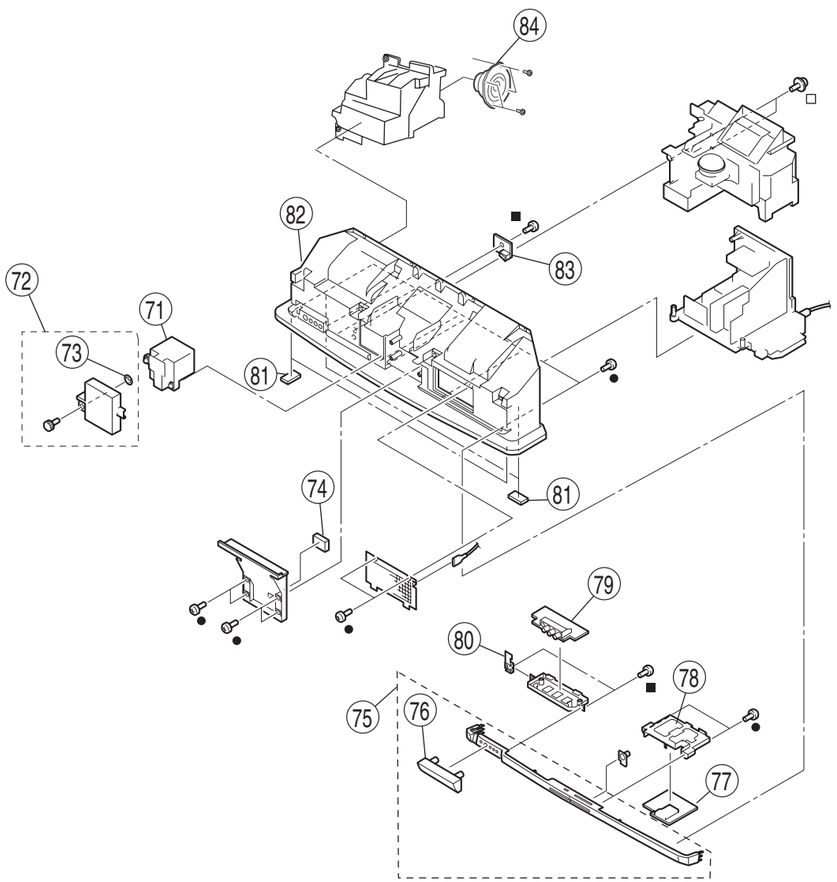

	REF. NO.	PART NO.	DESCRIPTION	[ASSEMBLY INCLUDES]
⚠	*71	A-1606-034-B	LAMP BLOCK (RP) ASSY	
	72	X-2021-543-1	DOOR ASSY, LAMP	[73]
*	73	3-650-537-00	WASHER	
	74	4-096-431-01	CUSHION (SP), SHIELD	
	75	X-2021-559-2	COVER ASSY (50), BOTTOM **	[76]
	75	X-2024-970-1	COVER ASSY (50), BOTTOM **	[76]
	76	4-094-721-03	DOOR, H3	
	77	A-1060-184-A	HM BOARD, COMPLETE	
*	78	2-021-132-01	BRACKET, MS	
	79	A-1054-669-A	H3 BOARD, MOUNTED	
	80	4-094-757-01	SPRING, PLATE	

REF. NO.	PART NO.	DESCRIPTION	[ASSEMBLY INCLUDES]
81	4-097-548-01	CUSHION, FOOT	
82	X-2021-552-1	CABINET ASSY (50), BOTTOM **	
82	X-2021-837-1	CABINET ASSY (50), BOTTOM **	
83	A-1054-670-A	T BOARD, MOUNTED	
84	1-825-960-11	LOUDSPEAKER (13CM)	

**These items are manufactured at different facilities. Either part can be used as a replacement.

NOTE: The components identified by shading and ⚠ mark are critical for safety. Replace only with part number specified.

NOTE: Les composants identifies per un trame et une marque ⚠ sont critiques pour la securite. Ne les remplacer que par une piece portant le numero specifie.

4-4. CHASSIS

■	7-685-167-19	SCREW +P 4X35 TYPE2 NON-SLIT
□	7-685-648-79	SCREW +BVTP 3X12 TYPE2 IT-3

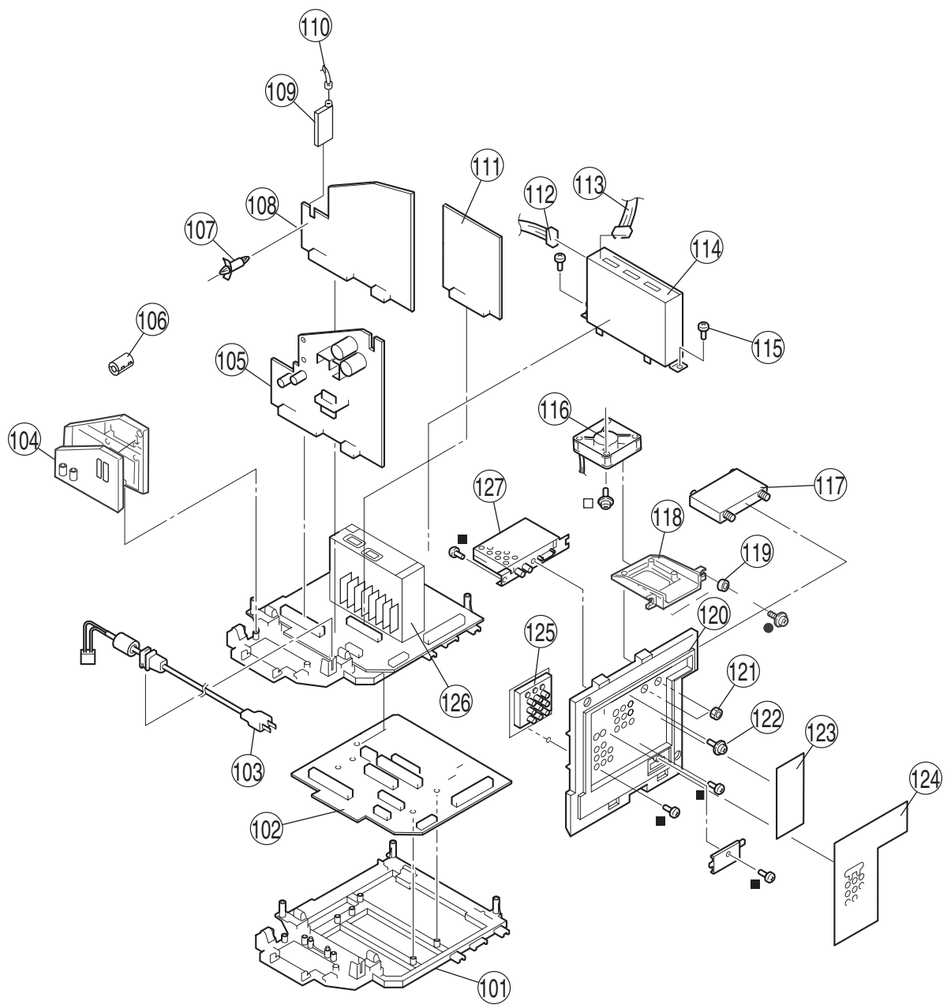

	REF. NO.	PART NO.	DESCRIPTION	[ASSEMBLY INCLUDES]
*	101	4-103-435-01	BRACKET, MAIN**	
*	101	2-050-148-01	MAIN BRACKET**	
	102	A-1060-178-B	G2 BOARD, COMPLETE	
⚠	103	1-791-192-21	CORD, NOISE FILTER WITH POWER	
	104	A-1060-176-A	F BOARD, COMPLETE	
	105	A-1060-177-A	G1 BOARD, COMPLETE	
	106	1-500-082-11	CLAMP, SLEEVE FERRITE	
*	107	4-092-047-01	CIRCUIT BOARD SUPPORTS	
	108	A-1060-166-A	A BOARD, COMPLETE	
	109	8-598-594-10	TUNER, FSS BTF-FA421	
*	110	1-557-056-31	CABLE, P-P	
	111	A-1060-187-A	KD BOARD, COMPLETE	
☛	112	1-910-004-95	17P CONNECTOR ASSY (LVDS CABLE)	
☛	113	1-910-004-94	17P CONNECTOR ASSY (LVDS CABLE)	
	114	A-1060-168-D	B BOARD, COMPLETE	

	REF. NO.	PART NO.	DESCRIPTION	[ASSEMBLY INCLUDES]
	115	4-029-432-01	SCREW (3X12), (+) BVWHTP	
⚠ *	116	1-787-081-11	FAN, DC	
	117	8-597-906-00	ANTENNA SWITCH RFD-SA801	
*	118	4-103-439-01	BRACKET, FAN (CHASSIS)	
*	119	2-148-339-01	CUSHION (FAN)	
	120	2-050-149-01	U BRACKET	
	121	3-682-691-00	NUT, WASHER HEXAGON	
	122	4-382-854-01	SCREW (M3X8), P, SW (+)	
	123	2-048-669-01	LABEL (DIGITAL), TERMINAL	
	124	2-048-668-01	LABEL, TERMINAL	
	125	A-1054-666-A	U BOARD, MOUNTED	
	126	A-1058-689-A	Q BOX ASSEMBLY	
			The Q Box Assembly contains the QT Board, the QM Board, and the QU Board. These boards cannot be ordered separately.	
*	127	A-1068-754-A	P BOARD, COMPLETE	

**These items are manufactured at different facilities. Either part can be used as a replacement.

NOTE: The components identified by shading and ⚠ mark are critical for safety. Replace only with part number specified.

NOTE: Les composants identifies per un trame et une marque ⚠ sont critiques pour la securite. Ne les remplacer que par une piece portant le numero specifie.

4-5. OPTICAL UNIT BLOCK

■	7-685-167-19	SCREW +P 4X35 TYPE2 NON-SLIT
□	7-685-648-79	SCREW +BVTP 3X12 TYPE2 IT-3

Caution:
When replacing the Optics Unit Block Assembly be sure to remove any dust particles.

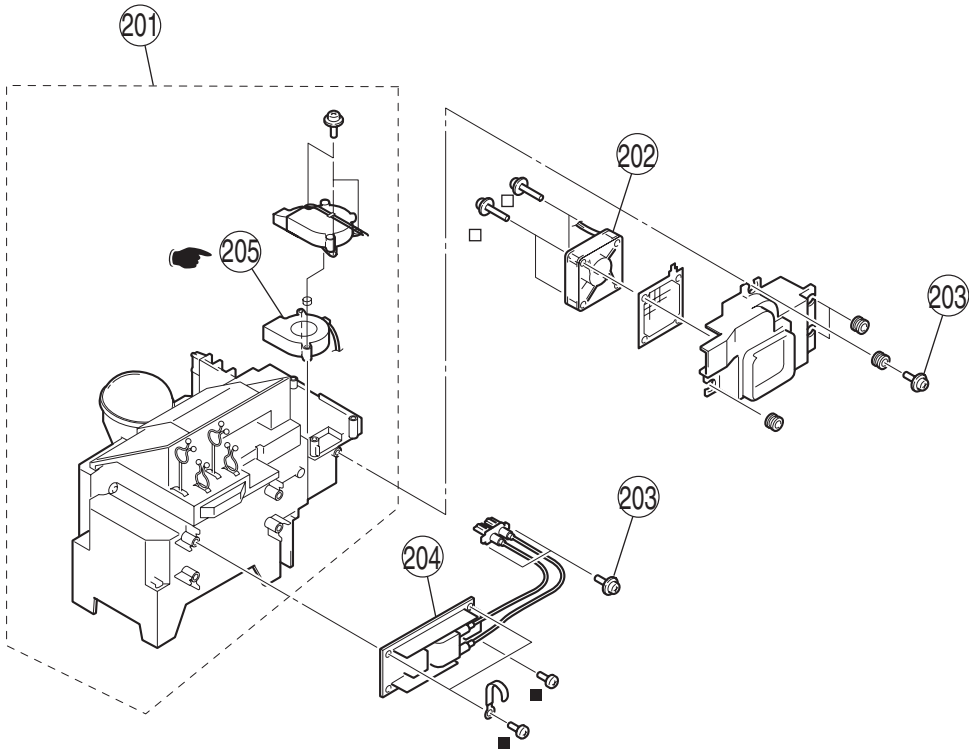

REF. NO.	PART NO.	DESCRIPTION	[ASSEMBLY INCLUDES]
⚠ 201	A-1084-658-A	OPTICS UNIT BLOCK (IRP) ASSY (KDF-42WE655 ONLY)	[205]
⚠ 201	A-1084-660-A	OPTICS UNIT BLOCK (IRP) ASSY (KDF-50WE655 ONLY)	[205]
⚠ 202	1-787-057-11	D.C. FAN	
203	4-302-404-03	SCREW (WASHER HEAD) (+P 4X16)	
⚠ 204	1-468-798-14	POWER SUPPLY BLOCK	
⚠ 205	1-787-065-11	D.C. FAN (SIROCCO)	

SECTION 5: ELECTRICAL PARTS LIST

NOTE: The components identified by shading and ⚠ mark are critical for safety. Replace only with part number specified.

NOTE: Les composants identifies per un trame et une marque ⚠ sont critiques pour la securite. Ne les remplacer que par une piece portant le numero specifie.

*** Items marked with an asterisk are not stocked since they are seldom required for routine service. Expect some delay when ordering these components.**

U

RESISTORS
- **All resistors are in ohms**
- **F : nonflammable**
- **All variable and adjustable resistors have characteristic curve B, unless otherwise noted.**

When ordering parts by reference number, please include the board name.

U

A-1054-666-A UBOARD, MOUNTED

CAPACITOR

REF. NO.	PART NO.	DESCRIPTION	VALUES		
C9401	1-125-891-11	CERAMIC CHIP	0.47µF	10%	10V
C9402	1-162-970-11	CERAMIC CHIP	0.01µF	10%	25V
C9403	1-162-964-11	CERAMIC CHIP	0.001µF	10%	50V
C9404	1-164-505-11	CERAMIC CHIP	2.2µF		16V
C9405	1-162-964-11	CERAMIC CHIP	0.001µF	10%	50V
C9406	1-162-964-11	CERAMIC CHIP	0.001µF	10%	50V
C9407	1-162-964-11	CERAMIC CHIP	0.001µF	10%	50V
C9408	1-125-891-11	CERAMIC CHIP	0.47µF	10%	10V
C9409	1-125-891-11	CERAMIC CHIP	0.47µF	10%	10V
C9410	1-162-970-11	CERAMIC CHIP	0.01µF	10%	25V
C9411	1-164-505-11	CERAMIC CHIP	2.2µF		16V
C9412	1-162-964-11	CERAMIC CHIP	0.001µF	10%	50V
C9413	1-162-964-11	CERAMIC CHIP	0.001µF	10%	50V
C9415	1-162-970-11	CERAMIC CHIP	0.01µF	10%	25V
C9416	1-164-505-11	CERAMIC CHIP	2.2µF		16V
C9417	1-164-505-11	CERAMIC CHIP	2.2µF		16V
C9418	1-164-505-11	CERAMIC CHIP	2.2µF		16V
C9419	1-164-505-11	CERAMIC CHIP	2.2µF		16V
C9420	1-164-505-11	CERAMIC CHIP	2.2µF		16V
C9421	1-164-505-11	CERAMIC CHIP	2.2µF		16V
C9422	1-164-505-11	CERAMIC CHIP	2.2µF		16V
C9423	1-164-505-11	CERAMIC CHIP	2.2µF		16V
C9424	1-164-505-11	CERAMIC CHIP	2.2µF		16V
C9426	1-164-505-11	CERAMIC CHIP	2.2µF		16V

CONNECTOR

REF. NO.	PART NO.	DESCRIPTION
CN9401	1-778-398-11	CONNECTOR, BOARD TO BOARD 15P
* CN9402	1-691-632-22	CONNECTOR, BOARD TO BOARD 15P

DIODE

REF. NO.	PART NO.	DESCRIPTION	VALUES
D9401	8-719-977-28	DIODE	DTZ10B
D9403	8-719-977-28	DIODE	DTZ10B

JACK

REF. NO.	PART NO.	DESCRIPTION
J9401	1-774-748-11	TERMINAL BLOCK, S
J9402	1-573-967-12	BLOCK, (S) TERMINAL

RESISTOR

REF. NO.	PART NO.	DESCRIPTION	VALUES		
R9401	1-218-665-11	METAL CHIP	75	0.50%	1/10W
R9402	1-218-665-11	METAL CHIP	75	0.50%	1/10W
R9403	1-216-864-11	SHORT CHIP			
R9404	1-216-864-11	SHORT CHIP			
R9405	1-216-849-11	METAL CHIP	220K	5%	1/10W
R9406	1-216-849-11	METAL CHIP	220K	5%	1/10W
R9407	1-218-665-11	METAL CHIP	75	0.50%	1/10W
R9408	1-218-665-11	METAL CHIP	75	0.50%	1/10W
R9409	1-216-864-11	SHORT CHIP			
R9410	1-216-849-11	METAL CHIP	220K	5%	1/10W
R9411	1-216-849-11	METAL CHIP	220K	5%	1/10W
R9412	1-216-821-11	METAL CHIP	1K	5%	1/10W
R9413	1-216-821-11	METAL CHIP	1K	5%	1/10W
R9414	1-216-849-11	METAL CHIP	220K	5%	1/10W
R9415	1-216-849-11	METAL CHIP	220K	5%	1/10W
R9416	1-216-821-11	METAL CHIP	1K	5%	1/10W
R9417	1-216-821-11	METAL CHIP	1K	5%	1/10W
R9418	1-216-864-11	SHORT CHIP			
R9419	1-216-864-11	SHORT CHIP			
R9420	1-218-665-11	METAL CHIP	75	0.50%	1/10W
R9421	1-218-665-11	METAL CHIP	75	0.50%	1/10W
R9422	1-218-665-11	METAL CHIP	75	0.50%	1/10W
R9423	1-216-821-11	METAL CHIP	1K	5%	1/10W
R9424	1-216-821-11	METAL CHIP	1K	5%	1/10W
R9425	1-218-665-11	METAL CHIP	75	0.50%	1/10W
R9426	1-218-665-11	METAL CHIP	75	0.50%	1/10W
R9427	1-216-864-11	SHORT CHIP			

U A

REF. NO.	PART NO.	DESCRIPTION	VALUES		
R9428	1-216-864-11	SHORT CHIP			
R9429	1-216-864-11	SHORT CHIP			
R9430	1-216-864-11	SHORT CHIP			
R9431	1-216-864-11	SHORT CHIP			
R9432	1-216-864-11	SHORT CHIP			
	VARISTOR				
VD9407	1-803-974-21	VARISTOR, CHIP	(1608)		
VD9408	1-803-974-21	VARISTOR, CHIP	(1608)		
VD9410	1-803-974-21	VARISTOR, CHIP	(1608)		
VD9414	1-803-974-21	VARISTOR, CHIP	(1608)		
VD9415	1-803-974-21	VARISTOR, CHIP	(1608)		
VD9416	1-803-974-21	VARISTOR, CHIP	(1608)		
VD9419	1-803-974-21	VARISTOR, CHIP	(1608)		
VD9420	1-803-974-21	VARISTOR, CHIP	(1608)		
VD9431	1-803-974-21	VARISTOR, CHIP	(1608)		
VD9432	1-803-974-21	VARISTOR, CHIP	(1608)		
VD9433	1-803-974-21	VARISTOR, CHIP	(1608)		
VD9436	1-803-974-21	VARISTOR, CHIP	(1608)		
VD9439	1-803-974-21	VARISTOR, CHIP	(1608)		
VD9441	1-803-974-21	VARISTOR, CHIP	(1608)		
VD9442	1-803-974-21	VARISTOR, CHIP	(1608)		

A

*	**A-1060-166-A**	**A BOARD, COMPLETE**			
	CAPACITOR				
C8002	1-107-826-11	CERAMIC CHIP	0.1µF	10%	16V
C8003	1-107-826-11	CERAMIC CHIP	0.1µF	10%	16V
C8004	1-162-913-11	CERAMIC CHIP	8pF	0.50pF	50V
C8005	1-117-720-11	CERAMIC CHIP	4.7µF		10V
C8006	1-135-960-91	CERAMIC CHIP	10µF	10%	25V
C8007	1-164-360-11	CERAMIC CHIP	0.1µF		16V
C8008	1-107-826-11	CERAMIC CHIP	0.1µF	10%	16V
C8009	1-107-826-11	CERAMIC CHIP	0.1µF	10%	16V
C8010	1-127-931-21	ELECT CHIP	470µF	20%	16V
C8011	1-127-931-21	ELECT CHIP	470µF	20%	16V
C8012	1-107-826-11	CERAMIC CHIP	0.1µF	10%	16V
C8013	1-117-720-11	CERAMIC CHIP	4.7µF		10V
C8014	1-124-779-00	ELECT CHIP	10µF	20%	16V
C8015	1-162-966-11	CERAMIC CHIP	0.0022µF	10%	50V
C8016	1-117-681-11	ELECT CHIP	100µF	20%	16V
C8018	1-165-908-11	CERAMIC CHIP	1µF	10%	10V
C8019	1-107-826-11	CERAMIC CHIP	0.1µF	10%	16V
C8021	1-165-908-11	CERAMIC CHIP	1µF	10%	10V
C8022	1-162-970-11	CERAMIC CHIP	0.01µF	10%	25V
C8030	1-128-407-11	ELECT CHIP	47µF	20%	50V
C8031	1-162-966-11	CERAMIC CHIP	0.0022µF	10%	50V
C8032	1-117-681-11	ELECT CHIP	100µF	20%	16V
C8033	1-162-966-11	CERAMIC CHIP	0.0022µF	10%	50V
C8036	1-162-966-11	CERAMIC CHIP	0.0022µF	10%	50V
C8037	1-117-681-11	ELECT CHIP	100µF	20%	16V
C8041	1-162-966-11	CERAMIC CHIP	0.0022µF	10%	50V
C8042	1-117-681-11	ELECT CHIP	100µF	20%	16V
C8043	1-164-156-11	CERAMIC CHIP	0.1µF		25V
C8044	1-117-681-11	ELECT CHIP	100µF	20%	16V
C8045	1-107-826-11	CERAMIC CHIP	0.1µF	10%	16V
C8046	1-107-826-11	CERAMIC CHIP	0.1µF	10%	16V
C8047	1-128-994-21	ELECT CHIP	47µF	20%	10V
C8048	1-107-826-11	CERAMIC CHIP	0.1µF	10%	16V
C8049	1-164-505-11	CERAMIC CHIP	2.2µF		16V
C8050	1-164-505-11	CERAMIC CHIP	2.2µF		16V
C8051	1-162-970-11	CERAMIC CHIP	0.01µF	10%	25V
C8052	1-164-156-11	CERAMIC CHIP	0.1µF		25V
C8053	1-165-176-11	CERAMIC CHIP	0.047µF	10%	16V
C8054	1-115-156-11	CERAMIC CHIP	1µF		10V
C8055	1-162-961-11	CERAMIC CHIP	330pF	10%	50V
C8056	1-127-804-91	CERAMIC CHIP	100pF	1%	50V
C8057	1-165-176-11	CERAMIC CHIP	0.047µF	10%	16V
C8058	1-115-156-11	CERAMIC CHIP	1µF		10V
C8059	1-164-230-11	CERAMIC CHIP	220pF	5%	50V
C8061	1-109-982-11	CERAMIC CHIP	1µF	10%	10V
C8062	1-107-826-11	CERAMIC CHIP	0.1µF	10%	16V
C8063	1-165-908-11	CERAMIC CHIP	1µF	10%	10V
C8064	1-107-826-11	CERAMIC CHIP	0.1µF	10%	16V
C8065	1-162-913-11	CERAMIC CHIP	8pF	0.50pF	50V
C8066	1-107-826-11	CERAMIC CHIP	0.1µF	10%	16V
C8067	1-107-826-11	CERAMIC CHIP	0.1µF	10%	16V
C8068	1-107-826-11	CERAMIC CHIP	0.1µF	10%	16V
C8069	1-107-826-11	CERAMIC CHIP	0.1µF	10%	16V
C8070	1-107-826-11	CERAMIC CHIP	0.1µF	10%	16V
C8071	1-164-505-11	CERAMIC CHIP	2.2µF		16V
C8072	1-164-505-11	CERAMIC CHIP	2.2µF		16V
C8073	1-117-720-11	CERAMIC CHIP	4.7µF		10V
C8074	1-164-505-11	CERAMIC CHIP	2.2µF		16V
C8075	1-164-505-11	CERAMIC CHIP	2.2µF		16V
C8076	1-164-505-11	CERAMIC CHIP	2.2µF		16V
C8077	1-127-931-21	ELECT CHIP	470µF	20%	16V
C8078	1-127-931-21	ELECT CHIP	470µF	20%	16V
C8080	1-124-779-00	ELECT CHIP	10µF	20%	16V
C8081	1-124-779-00	ELECT CHIP	10µF	20%	16V
C8082	1-162-968-11	CERAMIC CHIP	0.0047µF	10%	50V
C8083	1-162-968-11	CERAMIC CHIP	0.0047µF	10%	50V
C8084	1-165-908-11	CERAMIC CHIP	1µF	10%	10V

A

REF. NO.	PART NO.	DESCRIPTION	VALUES		
C8085	1-165-908-11	CERAMIC CHIP	1µF	10%	10V
C8086	1-162-964-11	CERAMIC CHIP	0.001µF	10%	50V
C8087	1-162-964-11	CERAMIC CHIP	0.001µF	10%	50V
C8088	1-165-908-11	CERAMIC CHIP	1µF	10%	10V
C8089	1-162-964-11	CERAMIC CHIP	0.001µF	10%	50V
C8090	1-165-908-11	CERAMIC CHIP	1µF	10%	10V
C8091	1-162-964-11	CERAMIC CHIP	0.001µF	10%	50V
C8092	1-117-681-11	ELECT CHIP	100µF	20%	16V
C8093	1-117-681-11	ELECT CHIP	100µF	20%	16V
C8094	1-117-681-11	ELECT CHIP	100µF	20%	16V
C8095	1-117-681-11	ELECT CHIP	100µF	20%	16V
C8096	1-117-681-11	ELECT CHIP	100µF	20%	16V
C8097	1-117-681-11	ELECT CHIP	100µF	20%	16V
C8098	1-127-931-21	ELECT CHIP	470µF	20%	16V
C8099	1-107-826-11	CERAMIC CHIP	0.1µF	10%	16V
C8100	1-117-720-11	CERAMIC CHIP	4.7µF		10V
C8101	1-127-931-21	ELECT CHIP	470µF	20%	16V
C8107	1-162-915-11	CERAMIC CHIP	10pF	0.50pF	50V
C8108	1-127-931-21	ELECT CHIP	470µF	20%	16V
C8200	1-127-715-91	CERAMIC CHIP	0.22µF	10%	16V
C8201	1-128-996-11	ELECT CHIP	4.7µF	20%	50V
C8202	1-117-681-11	ELECT CHIP	100µF	20%	16V
C8203	1-107-826-11	CERAMIC CHIP	0.1µF	10%	16V
C8204	1-124-779-00	ELECT CHIP	10µF	20%	16V
C8205	1-164-360-11	CERAMIC CHIP	0.1µF		16V
C8206	1-117-681-11	ELECT CHIP	100µF	20%	16V
C8207	1-164-230-11	CERAMIC CHIP	220pF	5%	50V
C8208	1-164-230-11	CERAMIC CHIP	220pF	5%	50V
C8209	1-127-573-11	CERAMIC CHIP	1µF	10%	16V
C8210	1-127-573-11	CERAMIC CHIP	1µF	10%	16V
C8220	1-136-167-00	FILM	0.15µF	5%	50V
C8221	1-136-159-00	FILM	0.033µF	5%	50V
C8222	1-136-167-00	FILM	0.15µF	5%	50V
C8223	1-136-159-00	FILM	0.033µF	5%	50V
C8224	1-162-915-11	CERAMIC CHIP	10pF	0.50pF	50V
C8225	1-107-826-11	CERAMIC CHIP	0.1µF	10%	16V
C8226	1-162-915-11	CERAMIC CHIP	10pF	0.50pF	50V
C8227	1-128-992-21	ELECT CHIP	47µF	20%	25V
C8228	1-162-923-11	CERAMIC CHIP	47pF	5%	50V
C8229	1-162-923-11	CERAMIC CHIP	47pF	5%	50V
C8230	1-162-923-11	CERAMIC CHIP	47pF	5%	50V
C8231	1-162-923-11	CERAMIC CHIP	47pF	5%	50V
C8232	1-136-161-00	FILM	0.047µF	5%	50V
C8233	1-136-161-00	FILM	0.047µF	5%	50V
C8301	1-127-931-21	ELECT CHIP	470µF	20%	16V
C8302	1-162-917-11	CERAMIC CHIP	15pF	5%	50V
C8303	1-117-681-11	ELECT CHIP	100µF	20%	16V

REF. NO.	PART NO.	DESCRIPTION	VALUES		
C8304	1-164-156-11	CERAMIC CHIP	0.1µF		25V
C8305	1-164-227-11	CERAMIC CHIP	0.022µF	10%	25V
C8306	1-162-964-11	CERAMIC CHIP	0.001µF	10%	50V
C8307	1-100-118-21	ELECT CHIP	82µF	20%	16V
C8308	1-164-156-11	CERAMIC CHIP	0.1µF		25V
C8309	1-107-826-11	CERAMIC CHIP	0.1µF	10%	16V
C8310	1-107-826-11	CERAMIC CHIP	0.1µF	10%	16V
C8311	1-107-826-11	CERAMIC CHIP	0.1µF	10%	16V
C8312	1-162-923-11	CERAMIC CHIP	47pF	5%	50V
C8313	1-107-826-11	CERAMIC CHIP	0.1µF	10%	16V
C8314	1-124-779-00	ELECT CHIP	10µF	20%	16V
C8315	1-164-677-11	CERAMIC CHIP	0.033µF	10%	16V
C8316	1-164-677-11	CERAMIC CHIP	0.033µF	10%	16V
C8319	1-164-156-11	CERAMIC CHIP	0.1µF		25V
C8320	1-164-156-11	CERAMIC CHIP	0.1µF		25V
C8321	1-164-156-11	CERAMIC CHIP	0.1µF		25V
C8322	1-164-156-11	CERAMIC CHIP	0.1µF		25V
C8323	1-162-966-11	CERAMIC CHIP	0.0022µF	10%	50V
C8324	1-162-967-11	CERAMIC CHIP	0.0033µF	10%	50V
C8325	1-117-681-11	ELECT CHIP	100µF	20%	16V
C8326	1-164-156-11	CERAMIC CHIP	0.1µF		25V
C8327	1-117-681-11	ELECT CHIP	100µF	20%	16V
C8328	1-165-875-11	CERAMIC CHIP	10µF	10%	10V
C8329	1-107-826-11	CERAMIC CHIP	0.1µF	10%	16V
C8330	1-107-826-11	CERAMIC CHIP	0.1µF	10%	16V
C8331	1-107-826-11	CERAMIC CHIP	0.1µF	10%	16V
C8332	1-135-960-91	CERAMIC CHIP	10µF	10%	25V
C8333	1-107-826-11	CERAMIC CHIP	0.1µF	10%	16V
C8334	1-107-826-11	CERAMIC CHIP	0.1µF	10%	16V
C8335	1-117-681-11	ELECT CHIP	100µF	20%	16V
C8336	1-164-004-11	CERAMIC CHIP	0.1µF	10%	25V
C8337	1-162-917-11	CERAMIC CHIP	15pF	5%	50V
C8338	1-162-917-11	CERAMIC CHIP	15pF	5%	50V
C8339	1-164-004-11	CERAMIC CHIP	0.1µF	10%	25V
C8340	1-135-960-91	CERAMIC CHIP	10µF	10%	25V
C8341	1-164-156-11	CERAMIC CHIP	0.1µF		25V
C8342	1-164-156-11	CERAMIC CHIP	0.1µF		25V
C8343	1-135-960-91	CERAMIC CHIP	10µF	10%	25V
C8346	1-100-118-21	ELECT CHIP	82µF	20%	16V
C8347	1-100-118-21	ELECT CHIP	82µF	20%	16V
C8350	1-107-826-11	CERAMIC CHIP	0.1µF	10%	16V
C8351	1-164-315-11	CERAMIC CHIP	470pF	5%	50V
C8352	1-162-915-11	CERAMIC CHIP	10pF	0.50pF	50V
C8353	1-107-826-11	CERAMIC CHIP	0.1µF	10%	16V
C8354	1-107-826-11	CERAMIC CHIP	0.1µF	10%	16V
C8355	1-125-891-11	CERAMIC CHIP	0.47µF	10%	10V
C8356	1-125-891-11	CERAMIC CHIP	0.47µF	10%	10V

A

REF. NO.	PART NO.	DESCRIPTION	VALUES		
C8357	1-125-891-11	CERAMIC CHIP	0.47µF	10%	10V
C8358	1-107-826-11	CERAMIC CHIP	0.1µF	10%	16V
C8359	1-110-530-11	ELECT CHIP	1000µF	20%	6.3V
C8360	1-110-530-11	ELECT CHIP	1000µF	20%	6.3V
C8361	1-117-681-11	ELECT CHIP	100µF	20%	16V
C8362	1-164-156-11	CERAMIC CHIP	0.1µF		25V
C8365	1-128-996-11	ELECT CHIP	4.7µF	20%	50V
C8366	1-164-156-11	CERAMIC CHIP	0.1µF		25V
C8367	1-117-681-11	ELECT CHIP	100µF	20%	16V
C8368	1-162-970-11	CERAMIC CHIP	0.01µF	10%	25V
C8369	1-164-156-11	CERAMIC CHIP	0.1µF		25V
C8370	1-125-891-11	CERAMIC CHIP	0.47µF	10%	10V
C8372	1-128-996-11	ELECT CHIP	4.7µF	20%	50V
C8373	1-162-970-11	CERAMIC CHIP	0.01µF	10%	25V
C8374	1-125-891-11	CERAMIC CHIP	0.47µF	10%	10V
C8375	1-162-927-11	CERAMIC CHIP	100pF	5%	50V
C8376	1-162-919-11	CERAMIC CHIP	22pF	5%	50V
C8377	1-162-924-11	CERAMIC CHIP	56pF	5%	50V
C8409	1-117-681-11	ELECT CHIP	100µF	20%	16V
C8410	1-162-974-11	CERAMIC CHIP	0.01µF	50V	
C8422	1-117-681-11	ELECT CHIP	100µF	20%	16V
C8531	1-128-357-11	ELECT CHIP	10µF	20%	16V
C8532	1-128-357-11	ELECT CHIP	10µF	20%	16V
C8544	1-117-681-11	ELECT CHIP	100µF	20%	16V
C8545	1-107-826-11	CERAMIC CHIP	0.1µF	10%	16V
C8548	1-127-931-21	ELECT CHIP	470µF	20%	16V
C8550	1-165-908-11	CERAMIC CHIP	1µF	10%	10V
C8551	1-165-908-11	CERAMIC CHIP	1µF	10%	10V
C8552	1-165-908-11	CERAMIC CHIP	1µF	10%	10V
C8553	1-165-908-11	CERAMIC CHIP	1µF	10%	10V
C8559	1-127-931-21	ELECT CHIP	470µF	20%	16V
C8560	1-107-826-11	CERAMIC CHIP	0.1µF	10%	16V
C8561	1-136-167-00	FILM	0.15µF	5%	50V
C8562	1-130-469-00	MYLAR	680pF	5%	50V
C8563	1-136-157-00	FILM	0.022µF	5%	50V
C8564	1-130-471-00	MYLAR	0.001µF	5%	50V
C8565	1-164-227-11	CERAMIC CHIP	0.022µF	10%	25V
C8566	1-127-715-91	CERAMIC CHIP	0.22µF	10%	16V
C8567	1-162-970-11	CERAMIC CHIP	0.01µF	10%	25V
C8568	1-127-715-91	CERAMIC CHIP	0.22µF	10%	16V
C8569	1-128-934-91	CERAMIC CHIP	0.33µF	20%	10V
C8570	1-117-681-11	ELECT CHIP	100µF	20%	16V
C8571	1-162-968-11	CERAMIC CHIP	0.0047µF	10%	50V
C8572	1-127-715-91	CERAMIC CHIP	0.22µF	10%	16V
C8573	1-124-779-00	ELECT CHIP	10µF	20%	16V
C8574	1-124-779-00	ELECT CHIP	10µF	20%	16V
C8575	1-126-193-11	ELECT CHIP	1µF	20%	50V

REF. NO.	PART NO.	DESCRIPTION	VALUES		
C8576	1-126-193-11	ELECT CHIP	1µF	20%	50V
C8577	1-127-715-91	CERAMIC CHIP	0.22µF	10%	16V
C8578	1-127-715-91	CERAMIC CHIP	0.22µF	10%	16V
C8579	1-127-715-91	CERAMIC CHIP	0.22µF	10%	16V
C8580	1-107-826-11	CERAMIC CHIP	0.1µF	10%	16V
C8581	1-127-715-91	CERAMIC CHIP	0.22µF	10%	16V
C8582	1-127-715-91	CERAMIC CHIP	0.22µF	10%	16V
C8583	1-126-767-11	ELECT	1000µF	20%	16V
C8584	1-127-715-91	CERAMIC CHIP	0.22µF	10%	16V
C8585	1-126-767-11	ELECT	1000µF	20%	16V
C8586	1-162-968-11	CERAMIC CHIP	0.0047µF	10%	50V
C8587	1-162-970-11	CERAMIC CHIP	0.01µF	10%	25V
C8588	1-128-996-11	ELECT CHIP	4.7µF	20%	50V
C8589	1-107-826-11	CERAMIC CHIP	0.1µF	10%	16V
C8590	1-126-193-11	ELECT CHIP	1µF	20%	50V
C8591	1-162-968-11	CERAMIC CHIP	0.0047µF	10%	50V
C8592	1-126-193-11	ELECT CHIP	1µF	20%	50V
C8593	1-117-681-11	ELECT CHIP	100µF	20%	16V
C8594	1-126-193-11	ELECT CHIP	1µF	20%	50V
C8596	1-136-157-00	FILM	0.022µF	5%	50V
C8597	1-136-167-00	FILM	0.15µF	5%	50V
C8598	1-130-471-00	MYLAR	0.001µF	5%	50V
C8599	1-126-193-11	ELECT CHIP	1µF	20%	50V
C8600	1-126-193-11	ELECT CHIP	1µF	20%	50V
C8601	1-126-193-11	ELECT CHIP	1µF	20%	50V
C8602	1-162-968-11	CERAMIC CHIP	0.0047µF	10%	50V
C8603	1-126-193-11	ELECT CHIP	1µF	20%	50V
C8604	1-130-469-00	MYLAR	680pF	5%	50V
C8605	1-162-968-11	CERAMIC CHIP	0.0047µF	10%	50V
C8606	1-162-970-11	CERAMIC CHIP	0.01µF	10%	25V
C8609	1-128-357-11	ELECT CHIP	10µF	20%	16V
C8610	1-128-357-11	ELECT CHIP	10µF	20%	16V
C8611	1-124-779-00	ELECT CHIP	10µF	20%	16V
C8613	1-136-159-00	FILM	0.033µF	5%	50V
C8614	1-107-826-11	CERAMIC CHIP	0.1µF	10%	16V
C8616	1-128-994-21	ELECT CHIP	47µF	20%	10V
C8617	1-117-681-11	ELECT CHIP	100µF	20%	16V
C8618	1-137-190-91	FILM	0.22µF	5%	50V
C8621	1-136-159-00	FILM	0.033µF	5%	50V
C8622	1-137-190-91	FILM	0.22µF	5%	50V
C8701	1-117-681-11	ELECT CHIP	100µF	20%	16V
C8702	1-127-692-11	CERAMIC CHIP	10µF	10%	16V
C8703	1-107-826-11	CERAMIC CHIP	0.1µF	10%	16V
C8704	1-127-931-21	ELECT CHIP	470µF	20%	16V
C8705	1-162-964-11	CERAMIC CHIP	0.001µF	10%	50V

A

	REF. NO.	PART NO.	DESCRIPTION	VALUES
		CONNECTOR		
*	CN8001	1-691-616-21	CONNECTOR, BOARD TO BOARD	15P
*	CN8002	1-580-974-11	CONNECTOR, BOARD TO BOARD	
*	CN8003	1-818-749-11	PIN, CONNECTOR	16P
*	CN8004	1-818-748-11	PIN, CONNECTOR	14P
*	CN8005	1-816-958-11	DIN CONNECTOR (PLUG)	96P
*	CN8006	1-778-959-11	CONNECTOR,BOARD TO BOARD	6P
*	CN8008	1-785-532-11	PIN, CONNECTOR (PC BOARD)	14P
*	CN8009	1-564-507-11	PLUG, CONNECTOR	4P
	CN8039	1-695-915-11	TAB (CONTACT)	
	CN8041	1-695-915-11	TAB (CONTACT)	
		DIODE		
	D8001	8-719-977-28	DIODE	DTZ10B
	D8002	8-719-977-28	DIODE	DTZ10B
	D8003	8-719-914-43	DIODE	DAN202K
	D8006	8-719-977-28	DIODE	DTZ10B
	D8007	8-719-977-28	DIODE	DTZ10B
	D8008	8-719-977-28	DIODE	DTZ10B
	D8009	8-719-977-28	DIODE	DTZ10B
	D8010	8-719-977-28	DIODE	DTZ10B
	D8011	8-719-977-28	DIODE	DTZ10B
	D8023	8-719-158-02	DIODE	RD3.9SB2
	D8200	8-719-041-97	DIODE	MA113-(TX)
	D8201	8-719-081-97	DIODE	MMDL914T1
	D8202	8-719-041-97	DIODE	MA113-(TX)
	D8203	8-719-977-28	DIODE	DTZ10B
	D8204	8-719-050-37	DIODE	M1MA152WA-T1
	D8205	8-719-914-43	DIODE	DAN202K
	D8301	8-719-081-67	DIODE	M1FM3
	D8302	8-719-081-67	DIODE	M1FM3
	D8305	8-719-056-78	DIODE	UDZ-TE-17-4.3B
	D8306	8-719-056-78	DIODE	UDZ-TE-17-4.3B
	D8307	8-719-081-97	DIODE	MMDL914T1
	D8308	8-719-081-97	DIODE	MMDL914T1
	D8501	8-719-071-74	DIODE	HZU11B1TRF
	D8701	8-719-080-41	DIODE	RB063L-30TE25
	D8702	6-500-294-01	DIODE	PTZ-TE25-3.9B
		FERRITE BEAD		
	FB8003	1-414-228-11	FERRITE	0µH
	FB8004	1-216-295-91	SHORT CHIP	
	FB8005	1-216-295-91	SHORT CHIP	
	FB8006	1-216-295-91	SHORT CHIP	
	FB8007	1-216-295-91	SHORT CHIP	
	FB8012	1-414-233-22	FERRITE	0µH
	FB8013	1-414-233-22	FERRITE	0µH
	FB8016	1-414-229-11	FERRITE	0µH
	FB8017	1-414-229-11	FERRITE	0µH
		FILTER		
	FL8001	1-239-848-21	FILTER, LOW PASS	
	FL8002	1-239-848-21	FILTER, LOW PASS	
	FL8003	1-239-848-21	FILTER, LOW PASS	
		IC		
	IC8001	8-753-204-12	IC	CXA2209Q-T6
	IC8002	6-706-805-01	IC	TL52055DR
	IC8200	8-759-278-58	IC	NJM4558V-TE2
	IC8220	8-759-278-58	IC	NJM4558V-TE2
	IC8301	8-752-394-69	IC	CXD2073Q-T4
	IC8302	6-702-510-01	IC	TPS5120DBTR
	IC8303	8-752-102-21	IC	CXA2103AQ
	IC8502	8-752-107-98	IC	CXA2188Q-T4
	IC8504	6-702-716-01	IC	NJW1149
	IC8505	8-759-278-58	IC	NJM4558V-TE2
	IC8506	8-759-278-58	IC	NJM4558V-TE2
	IC8701	6-704-407-01	IC	PQ1CZ41H2ZPH
		JACK		
	J8001	1-565-790-21	JACK, SMALL TYPE	2P
*	J8002	1-818-708-11	JACK, PIN	6P
*	J8004	1-818-709-11	PHONO JACK	6P
		COIL		
	L8001	1-400-397-11	INDUCTOR	10µH
	L8002	1-400-397-11	INDUCTOR	10µH
	L8003	1-469-555-21	INDUCTOR	10µH
	L8004	1-469-320-21	INDUCTOR	100µH
	L8006	1-469-317-21	INDUCTOR	10µH
	L8008	1-469-320-21	INDUCTOR	100µH
	L8010	1-414-856-11	INDUCTOR	10µH
	L8011	1-414-856-11	INDUCTOR	10µH
	L8015	1-400-397-11	INDUCTOR	10µH
	L8016	1-400-397-11	INDUCTOR	10µH
	L8017	1-414-856-11	INDUCTOR	10µH
	L8018	1-414-856-11	INDUCTOR	10µH
	L8019	1-414-856-11	INDUCTOR	10µH
	L8301	1-400-397-11	INDUCTOR	10µH
	L8302	1-424-789-41	INDUCTOR	10µH

A

REF. NO.	PART NO.	DESCRIPTION	VALUES
L8303	1-400-397-11	INDUCTOR	10µH
L8304	1-400-397-11	INDUCTOR	10µH
L8305	1-424-789-41	INDUCTOR	10µH
L8306	1-424-789-41	INDUCTOR	10µH
L8307	1-400-397-11	INDUCTOR	10µH
L8308	1-424-789-41	INDUCTOR	10µH
L8309	1-424-789-41	INDUCTOR	10µH
L8310	1-400-397-11	INDUCTOR	10µH
L8311	1-412-005-11	INDUCTOR	8.2µH
L8401	1-469-555-21	INDUCTOR	10µH
L8502	1-400-397-11	INDUCTOR	10µH
L8503	1-400-397-11	INDUCTOR	10µH
L8504	1-414-187-11	INDUCTOR	47µH
L8505	1-469-555-21	INDUCTOR	10µH
L8701	1-416-344-11	INDUCTOR	10µH
L8702	1-400-323-21	INDUCTOR	47µH

TRANSISTOR

REF. NO.	PART NO.	DESCRIPTION	VALUES
Q8001	8-729-010-05	TRANSISTOR	MSB709-RT1
Q8002	8-729-010-25	TRANSISTOR	MSD601-RT1
Q8003	8-729-010-25	TRANSISTOR	MSD601-RT1
Q8004	8-729-010-05	TRANSISTOR	MSB709-RT1
Q8005	8-729-010-25	TRANSISTOR	MSD601-RT1
Q8006	8-729-010-25	TRANSISTOR	MSD601-RT1
Q8007	8-729-010-05	TRANSISTOR	MSB709-RT1
Q8008	8-729-010-05	TRANSISTOR	MSB709-RT1
Q8009	8-729-010-05	TRANSISTOR	MSB709-RT1
Q8010	8-729-010-05	TRANSISTOR	MSB709-RT1
Q8011	8-729-010-25	TRANSISTOR	MSD601-RT1
Q8012	8-729-010-05	TRANSISTOR	MSB709-RT1
Q8013	8-729-010-25	TRANSISTOR	MSD601-RT1
Q8015	8-729-122-63	TRANSISTOR	2SA1226-E4
Q8017	8-729-122-63	TRANSISTOR	2SA1226-E4
Q8022	8-729-122-63	TRANSISTOR	2SA1226-E4
Q8023	8-729-422-33	TRANSISTOR	2SD601A-Q-TX
Q8024	8-729-010-05	TRANSISTOR	MSB709-RT1
Q8026	8-729-010-25	TRANSISTOR	MSD601-RT1
Q8027	8-729-422-33	TRANSISTOR	2SD601A-Q-TX
Q8028	8-729-010-05	TRANSISTOR	MSB709-RT1
Q8029	8-729-216-22	TRANSISTOR	2SA1162-G
Q8030	8-729-216-22	TRANSISTOR	2SA1162-G
Q8031	8-729-010-05	TRANSISTOR	MSB709-RT1
Q8032	8-729-010-25	TRANSISTOR	MSD601-RT1
Q8033	8-729-010-25	TRANSISTOR	MSD601-RT1
Q8034	8-729-010-25	TRANSISTOR	MSD601-RT1
Q8200	8-729-216-22	TRANSISTOR	2SA1162-G
Q8201	8-729-027-43	TRANSISTOR	DTC114EKA-T146
Q8202	8-729-027-43	TRANSISTOR	DTC114EKA-T146
Q8203	8-729-216-22	TRANSISTOR	2SA1162-G
Q8204	8-729-010-25	TRANSISTOR	MSD601-RT1
Q8220	8-729-010-25	TRANSISTOR	MSD601-RT1
Q8221	8-729-010-25	TRANSISTOR	MSD601-RT1
Q8222	8-729-010-25	TRANSISTOR	MSD601-RT1
Q8223	8-729-010-25	TRANSISTOR	MSD601-RT1
Q8301	8-729-010-05	TRANSISTOR	MSB709-RT1
Q8302	8-729-010-25	TRANSISTOR	MSD601-RT1
Q8303	8-729-010-25	TRANSISTOR	MSD601-RT1
Q8304	8-729-010-05	TRANSISTOR	MSB709-RT1
Q8305	8-729-010-25	TRANSISTOR	MSD601-RT1
Q8306	8-729-010-25	TRANSISTOR	MSD601-RT1
Q8307	8-729-010-25	TRANSISTOR	MSD601-RT1
Q8308	8-729-010-05	TRANSISTOR	MSB709-RT1
Q8309	8-729-010-25	TRANSISTOR	MSD601-RT1
Q8310	8-729-010-25	TRANSISTOR	MSD601-RT1
Q8311	6-550-222-01	TRANSISTOR	IRF7335D1-TR
Q8312	6-550-222-01	TRANSISTOR	IRF7335D1-TR
Q8313	8-729-422-33	TRANSISTOR	2SD601A-Q-TX
Q8401	8-729-010-05	TRANSISTOR	MSB709-RT1
Q8402	8-729-010-05	TRANSISTOR	MSB709-RT1
Q8410	8-729-010-05	TRANSISTOR	MSB709-RT1
Q8411	8-729-010-05	TRANSISTOR	MSB709-RT1
Q8412	8-729-010-05	TRANSISTOR	MSB709-RT1
Q8413	8-729-422-33	TRANSISTOR	2SD601A-Q-TX
Q8414	8-729-422-33	TRANSISTOR	2SD601A-Q-TX
Q8415	8-729-010-05	TRANSISTOR	MSB709-RT1
Q8416	8-729-422-33	TRANSISTOR	2SD601A-Q-TX
Q8501	8-729-422-33	TRANSISTOR	2SD601A-Q-TX
Q8502	8-729-422-33	TRANSISTOR	2SD601A-Q-TX
Q8503	8-729-422-33	TRANSISTOR	2SD601A-Q-TX

RESISTOR

REF. NO.	PART NO.	DESCRIPTION	VALUES		
R8004	1-216-853-11	METAL CHIP	470K	5%	1/10W
R8005	1-216-853-11	METAL CHIP	470K	5%	1/10W
R8006	1-216-864-11	SHORT CHIP			
R8007	1-216-864-11	SHORT CHIP			
R8008	1-216-864-11	SHORT CHIP			
R8009	1-216-853-11	METAL CHIP	470K	5%	1/10W
R8010	1-216-853-11	METAL CHIP	470K	5%	1/10W
R8013	1-216-821-11	METAL CHIP	1K	5%	1/10W
R8014	1-216-821-11	METAL CHIP	1K	5%	1/10W
R8015	1-216-821-11	METAL CHIP	1K	5%	1/10W
R8016	1-216-821-11	METAL CHIP	1K	5%	1/10W
R8017	1-216-821-11	METAL CHIP	1K	5%	1/10W
R8018	1-216-821-11	METAL CHIP	1K	5%	1/10W
R8019	1-216-864-11	SHORT CHIP			
R8020	1-216-864-11	SHORT CHIP			

A

REF. NO.	PART NO.	DESCRIPTION	VALUES		
R8021	1-216-853-11	METAL CHIP	470K	5%	1/10W
R8022	1-216-853-11	METAL CHIP	470K	5%	1/10W
R8023	1-216-821-11	METAL CHIP	1K	5%	1/10W
R8024	1-216-821-11	METAL CHIP	1K	5%	1/10W
R8025	1-216-833-11	METAL CHIP	10K	5%	1/10W
R8026	1-216-833-11	METAL CHIP	10K	5%	1/10W
R8027	1-216-821-11	METAL CHIP	1K	5%	1/10W
R8028	1-216-821-11	METAL CHIP	1K	5%	1/10W
R8029	1-218-665-11	METAL CHIP	75	0.50%	1/10W
R8030	1-218-665-11	METAL CHIP	75	0.50%	1/10W
R8031	1-216-864-11	SHORT CHIP			
R8032	1-216-864-11	SHORT CHIP			
R8033	1-218-665-11	METAL CHIP	75	0.50%	1/10W
R8034	1-216-808-11	METAL CHIP	82	5%	1/10W
R8035	1-216-807-11	METAL CHIP	68	5%	1/10W
R8036	1-216-809-11	METAL CHIP	100	5%	1/10W
R8037	1-216-809-11	METAL CHIP	100	5%	1/10W
R8039	1-216-809-11	METAL CHIP	100	5%	1/10W
R8040	1-216-819-11	METAL CHIP	680	5%	1/10W
R8041	1-218-665-11	METAL CHIP	75	0.50%	1/10W
R8042	1-218-665-11	METAL CHIP	75	0.50%	1/10W
R8043	1-216-809-11	METAL CHIP	100	5%	1/10W
R8044	1-216-821-11	METAL CHIP	1K	5%	1/10W
R8046	1-218-665-11	METAL CHIP	75	0.50%	1/10W
R8047	1-216-819-11	METAL CHIP	680	5%	1/10W
R8048	1-216-845-11	METAL CHIP	100K	5%	1/10W
R8049	1-216-864-11	SHORT CHIP			
R8050	1-216-864-11	SHORT CHIP			
R8051	1-216-821-11	METAL CHIP	1K	5%	1/10W
R8052	1-216-864-11	SHORT CHIP			
R8053	1-216-821-11	METAL CHIP	1K	5%	1/10W
R8054	1-216-811-11	METAL CHIP	150	5%	1/10W
R8055	1-216-817-11	METAL CHIP	470	5%	1/10W
R8056	1-216-825-11	METAL CHIP	2.2K	5%	1/10W
R8057	1-216-824-11	METAL CHIP	1.8K	5%	1/10W
R8058	1-216-833-11	METAL CHIP	10K	5%	1/10W
R8059	1-216-821-11	METAL CHIP	1K	5%	1/10W
R8060	1-216-825-11	METAL CHIP	2.2K	5%	1/10W
R8061	1-216-824-11	METAL CHIP	1.8K	5%	1/10W
R8063	1-218-668-11	METAL CHIP	100	0.50%	1/10W
R8064	1-218-668-11	METAL CHIP	100	0.50%	1/10W
R8066	1-218-668-11	METAL CHIP	100	0.50%	1/10W
R8068	1-216-821-11	METAL CHIP	1K	5%	1/10W
R8069	1-216-833-11	METAL CHIP	10K	5%	1/10W
R8070	1-216-821-11	METAL CHIP	1K	5%	1/10W
R8071	1-216-809-11	METAL CHIP	100	5%	1/10W
R8072	1-216-843-11	METAL CHIP	68K	5%	1/10W
R8073	1-216-857-11	METAL CHIP	1M	5%	1/10W

REF. NO.	PART NO.	DESCRIPTION	VALUES		
R8074	1-218-889-11	METAL CHIP	56K	0.50%	1/10W
R8075	1-216-829-11	METAL CHIP	4.7K	5%	1/10W
R8076	1-216-821-11	METAL CHIP	1K	5%	1/10W
R8077	1-216-813-11	METAL CHIP	220	5%	1/10W
R8078	1-216-801-11	METAL CHIP	22	5%	1/10W
R8079	1-216-801-11	METAL CHIP	22	5%	1/10W
R8080	1-216-809-11	METAL CHIP	100	5%	1/10W
R8081	1-216-809-11	METAL CHIP	100	5%	1/10W
R8082	1-216-833-11	METAL CHIP	10K	5%	1/10W
R8083	1-216-809-11	METAL CHIP	100	5%	1/10W
R8084	1-216-843-11	METAL CHIP	68K	5%	1/10W
R8085	1-216-809-11	METAL CHIP	100	5%	1/10W
R8086	1-216-809-11	METAL CHIP	100	5%	1/10W
R8087	1-216-809-11	METAL CHIP	100	5%	1/10W
R8088	1-216-809-11	METAL CHIP	100	5%	1/10W
R8089	1-216-809-11	METAL CHIP	100	5%	1/10W
R8091	1-216-821-11	METAL CHIP	1K	5%	1/10W
R8092	1-216-809-11	METAL CHIP	100	5%	1/10W
R8093	1-216-809-11	METAL CHIP	100	5%	1/10W
R8094	1-216-809-11	METAL CHIP	100	5%	1/10W
R8095	1-216-833-11	METAL CHIP	10K	5%	1/10W
R8096	1-216-809-11	METAL CHIP	100	5%	1/10W
R8097	1-216-809-11	METAL CHIP	100	5%	1/10W
R8098	1-216-809-11	METAL CHIP	100	5%	1/10W
R8099	1-216-809-11	METAL CHIP	100	5%	1/10W
R8100	1-216-809-11	METAL CHIP	100	5%	1/10W
R8101	1-216-809-11	METAL CHIP	100	5%	1/10W
R8102	1-216-809-11	METAL CHIP	100	5%	1/10W
R8103	1-216-809-11	METAL CHIP	100	5%	1/10W
R8104	1-216-809-11	METAL CHIP	100	5%	1/10W
R8105	1-216-809-11	METAL CHIP	100	5%	1/10W
R8106	1-216-809-11	METAL CHIP	100	5%	1/10W
R8107	1-216-809-11	METAL CHIP	100	5%	1/10W
R8108	1-216-809-11	METAL CHIP	100	5%	1/10W
R8109	1-216-809-11	METAL CHIP	100	5%	1/10W
R8110	1-216-809-11	METAL CHIP	100	5%	1/10W
R8111	1-216-809-11	METAL CHIP	100	5%	1/10W
R8112	1-216-809-11	METAL CHIP	100	5%	1/10W
R8113	1-216-809-11	METAL CHIP	100	5%	1/10W
R8114	1-216-809-11	METAL CHIP	100	5%	1/10W
R8115	1-216-809-11	METAL CHIP	100	5%	1/10W
R8117	1-216-861-11	METAL CHIP	2.2M	5%	1/10W
R8119	1-216-864-11	SHORT CHIP			
R8120	1-216-864-11	SHORT CHIP			
R8121	1-216-864-11	SHORT CHIP			
R8122	1-216-821-11	METAL CHIP	1K	5%	1/10W
R8123	1-216-821-11	METAL CHIP	1K	5%	1/10W
R8124	1-216-821-11	METAL CHIP	1K	5%	1/10W

A

REF. NO.	PART NO.	DESCRIPTION	VALUES		
R8126	1-216-825-11	METAL CHIP	2.2K	5%	1/10W
R8127	1-216-801-11	METAL CHIP	22	5%	1/10W
R8128	1-216-801-11	METAL CHIP	22	5%	1/10W
R8130	1-216-864-11	SHORT CHIP			
R8131	1-216-809-11	METAL CHIP	100	5%	1/10W
R8137	1-216-829-11	METAL CHIP	4.7K	5%	1/10W
R8138	1-216-833-11	METAL CHIP	10K	5%	1/10W
R8139	1-216-839-11	METAL CHIP	33K	5%	1/10W
R8140	1-216-837-11	METAL CHIP	22K	5%	1/10W
R8141	1-216-847-11	METAL CHIP	150K	5%	1/10W
R8142	1-216-833-11	METAL CHIP	10K	5%	1/10W
R8143	1-216-825-11	METAL CHIP	2.2K	5%	1/10W
R8144	1-218-678-11	METAL CHIP	270	0.50%	1/10W
R8145	1-218-678-11	METAL CHIP	270	0.50%	1/10W
R8146	1-218-678-11	METAL CHIP	270	0.50%	1/10W
R8147	1-218-678-11	METAL CHIP	270	0.50%	1/10W
R8148	1-218-678-11	METAL CHIP	270	0.50%	1/10W
R8149	1-218-678-11	METAL CHIP	270	0.50%	1/10W
R8150	1-216-857-11	METAL CHIP	1M	5%	1/10W
R8151	1-216-847-11	METAL CHIP	150K	5%	1/10W
R8152	1-216-823-11	METAL CHIP	1.5K	5%	1/10W
R8153	1-216-825-11	METAL CHIP	2.2K	5%	1/10W
R8155	1-216-845-11	METAL CHIP	100K	5%	1/10W
R8156	1-216-849-11	METAL CHIP	220K	5%	1/10W
R8158	1-216-833-11	METAL CHIP	10K	5%	1/10W
R8159	1-216-849-11	METAL CHIP	220K	5%	1/10W
R8161	1-216-849-11	METAL CHIP	220K	5%	1/10W
R8162	1-216-813-11	METAL CHIP	220	5%	1/10W
R8163	1-216-845-11	METAL CHIP	100K	5%	1/10W
R8165	1-216-841-11	METAL CHIP	47K	5%	1/10W
R8167	1-216-833-11	METAL CHIP	10K	5%	1/10W
R8168	1-216-829-11	METAL CHIP	4.7K	5%	1/10W
R8171	1-216-833-11	METAL CHIP	10K	5%	1/10W
R8172	1-216-845-11	METAL CHIP	100K	5%	1/10W
R8173	1-216-833-11	METAL CHIP	10K	5%	1/10W
R8176	1-216-864-11	SHORT CHIP			
R8178	1-216-857-11	METAL CHIP	1M	5%	1/10W
R8179	1-216-847-11	METAL CHIP	150K	5%	1/10W
R8182	1-216-825-11	METAL CHIP	2.2K	5%	1/10W
R8190	1-216-809-11	METAL CHIP	100	5%	1/10W
R8191	1-216-809-11	METAL CHIP	100	5%	1/10W
R8200	1-216-864-11	SHORT CHIP			
R8201	1-216-833-11	METAL CHIP	10K	5%	1/10W
R8202	1-216-864-11	SHORT CHIP			
R8203	1-216-836-11	METAL CHIP	18K	5%	1/10W
R8204	1-216-838-11	METAL CHIP	27K	5%	1/10W
R8205	1-216-841-11	METAL CHIP	47K	5%	1/10W
R8206	1-216-864-11	SHORT CHIP			

REF. NO.	PART NO.	DESCRIPTION	VALUES		
R8207	1-216-837-11	METAL CHIP	22K	5%	1/10W
R8208	1-216-857-11	METAL CHIP	1M	5%	1/10W
R8209	1-216-828-11	METAL CHIP	3.9K	5%	1/10W
R8210	1-218-867-11	METAL CHIP	6.8K	0.50%	1/10W
R8211	1-216-821-11	METAL CHIP	1K	5%	1/10W
R8212	1-216-833-11	METAL CHIP	10K	5%	1/10W
R8213	1-216-833-11	METAL CHIP	10K	5%	1/10W
R8214	1-218-867-11	METAL CHIP	6.8K	0.50%	1/10W
R8215	1-216-829-11	METAL CHIP	4.7K	5%	1/10W
R8216	1-218-867-11	METAL CHIP	6.8K	0.50%	1/10W
R8217	1-216-809-11	METAL CHIP	100	5%	1/10W
R8218	1-216-829-11	METAL CHIP	4.7K	5%	1/10W
R8219	1-216-809-11	METAL CHIP	100	5%	1/10W
R8220	1-216-864-11	SHORT CHIP			
R8223	1-216-864-11	SHORT CHIP			
R8224	1-216-848-11	METAL CHIP	180K	5%	1/10W
R8225	1-216-823-11	METAL CHIP	1.5K	5%	1/10W
R8226	1-216-864-11	SHORT CHIP			
R8227	1-216-848-11	METAL CHIP	180K	5%	1/10W
R8228	1-216-823-11	METAL CHIP	1.5K	5%	1/10W
R8229	1-216-822-11	METAL CHIP	1.2K	5%	1/10W
R8230	1-216-864-11	SHORT CHIP			
R8231	1-216-841-11	METAL CHIP	47K	5%	1/10W
R8233	1-216-830-11	METAL CHIP	5.6K	5%	1/10W
R8234	1-216-816-11	METAL CHIP	390	5%	1/10W
R8235	1-216-822-11	METAL CHIP	1.2K	5%	1/10W
R8236	1-216-841-11	METAL CHIP	47K	5%	1/10W
R8238	1-216-830-11	METAL CHIP	5.6K	5%	1/10W
R8239	1-216-816-11	METAL CHIP	390	5%	1/10W
R8240	1-216-864-11	SHORT CHIP			
R8241	1-216-864-11	SHORT CHIP			
R8242	1-216-829-11	METAL CHIP	4.7K	5%	1/10W
R8243	1-216-829-11	METAL CHIP	4.7K	5%	1/10W
R8244	1-216-835-11	METAL CHIP	15K	5%	1/10W
R8245	1-216-835-11	METAL CHIP	15K	5%	1/10W
R8246	1-216-835-11	METAL CHIP	15K	5%	1/10W
R8247	1-216-835-11	METAL CHIP	15K	5%	1/10W
R8248	1-216-827-11	METAL CHIP	3.3K	5%	1/10W
R8249	1-216-827-11	METAL CHIP	3.3K	5%	1/10W
R8250	1-216-864-11	SHORT CHIP			
R8251	1-216-864-11	SHORT CHIP			
R8252	1-216-864-11	SHORT CHIP			
R8254	1-218-676-11	METAL CHIP	220	0.50%	1/10W
R8255	1-218-676-11	METAL CHIP	220	0.50%	1/10W
R8256	1-218-676-11	METAL CHIP	220	0.50%	1/10W
R8257	1-218-676-11	METAL CHIP	220	0.50%	1/10W
R8258	1-218-676-11	METAL CHIP	220	0.50%	1/10W
R8259	1-218-676-11	METAL CHIP	220	0.50%	1/10W

A

REF. NO.	PART NO.	DESCRIPTION	VALUES		
R8260	1-218-676-11	METAL CHIP	220	0.50%	1/10W
R8261	1-218-676-11	METAL CHIP	220	0.50%	1/10W
R8262	1-218-676-11	METAL CHIP	220	0.50%	1/10W
R8263	1-218-676-11	METAL CHIP	220	0.50%	1/10W
R8264	1-218-676-11	METAL CHIP	220	0.50%	1/10W
R8265	1-218-676-11	METAL CHIP	220	0.50%	1/10W
R8269	1-216-809-11	METAL CHIP	100	5%	1/10W
R8275	1-216-803-11	METAL CHIP	33	5%	1/10W
R8276	1-216-825-11	METAL CHIP	2.2K	5%	1/10W
R8277	1-216-805-11	METAL CHIP	47	5%	1/10W
R8278	1-216-805-11	METAL CHIP	47	5%	1/10W
R8279	1-216-805-11	METAL CHIP	47	5%	1/10W
R8280	1-216-805-11	METAL CHIP	47	5%	1/10W
R8281	1-216-805-11	METAL CHIP	47	5%	1/10W
R8282	1-216-805-11	METAL CHIP	47	5%	1/10W
R8301	1-216-809-11	METAL CHIP	100	5%	1/10W
R8302	1-216-821-11	METAL CHIP	1K	5%	1/10W
R8303	1-218-841-11	METAL CHIP	560	0.50%	1/10W
R8304	1-216-846-11	METAL CHIP	120K	5%	1/10W
R8305	1-218-864-11	METAL CHIP	5.1K	0.50%	1/10W
R8306	1-218-841-11	METAL CHIP	560	0.50%	1/10W
R8307	1-216-845-11	METAL CHIP	100K	5%	1/10W
R8308	1-216-845-11	METAL CHIP	100K	5%	1/10W
R8309	1-216-850-11	METAL CHIP	270K	5%	1/10W
R8310	1-218-841-11	METAL CHIP	560	0.50%	1/10W
R8311	1-216-821-11	METAL CHIP	1K	5%	1/10W
R8312	1-218-716-11	METAL CHIP	10K	0.50%	1/10W
R8313	1-218-716-11	METAL CHIP	10K	0.50%	1/10W
R8314	1-216-821-11	METAL CHIP	1K	5%	1/10W
R8315	1-218-889-11	METAL CHIP	56K	0.50%	1/10W
R8316	1-216-819-11	METAL CHIP	680	5%	1/10W
R8317	1-216-819-11	METAL CHIP	680	5%	1/10W
R8318	1-216-815-11	METAL CHIP	330	5%	1/10W
R8319	1-218-704-11	METAL CHIP	3.3K	0.50%	1/10W
R8320	1-216-815-11	METAL CHIP	330	5%	1/10W
R8321	1-218-704-11	METAL CHIP	3.3K	0.50%	1/10W
R8322	1-218-726-11	METAL CHIP	27K	0.50%	1/10W
R8323	1-218-722-11	METAL CHIP	18K	0.50%	1/10W
R8324	1-216-811-11	METAL CHIP	150	5%	1/10W
R8325	1-216-821-11	METAL CHIP	1K	5%	1/10W
R8326	1-216-821-11	METAL CHIP	1K	5%	1/10W
R8327	1-216-812-11	METAL CHIP	180	5%	1/10W
R8328	1-218-859-11	METAL CHIP	3.3K	0.50%	1/10W
R8329	1-216-825-11	METAL CHIP	2.2K	5%	1/10W
R8330	1-216-839-11	METAL CHIP	33K	5%	1/10W
R8331	1-216-837-11	METAL CHIP	22K	5%	1/10W
R8332	1-218-855-11	METAL CHIP	2.2K	0.50%	1/10W
R8333	1-218-859-11	METAL CHIP	3.3K	0.50%	1/10W
R8334	1-216-864-11	SHORT CHIP			
R8336	1-216-839-11	METAL CHIP	33K	5%	1/10W
R8337	1-216-837-11	METAL CHIP	22K	5%	1/10W
R8338	1-216-809-11	METAL CHIP	100	5%	1/10W
R8339	1-216-845-11	METAL CHIP	100K	5%	1/10W
R8340	1-216-809-11	METAL CHIP	100	5%	1/10W
R8341	1-216-797-11	METAL CHIP	10	5%	1/10W
R8342	1-216-821-11	METAL CHIP	1K	5%	1/10W
R8343	1-216-821-11	METAL CHIP	1K	5%	1/10W
R8344	1-216-817-11	METAL CHIP	470	5%	1/10W
R8345	1-216-817-11	METAL CHIP	470	5%	1/10W
R8346	1-218-841-11	METAL CHIP	560	0.50%	1/10W
R8347	1-218-867-11	METAL CHIP	6.8K	0.50%	1/10W
R8348	1-216-797-11	METAL CHIP	10	5%	1/10W
R8349	1-218-841-11	METAL CHIP	560	0.50%	1/10W
R8350	1-216-825-11	METAL CHIP	2.2K	5%	1/10W
R8351	1-218-867-11	METAL CHIP	6.8K	0.50%	1/10W
R8352	1-218-865-11	METAL CHIP	5.6K	0.50%	1/10W
R8353	1-218-865-11	METAL CHIP	5.6K	0.50%	1/10W
R8354	1-216-817-11	METAL CHIP	470	5%	1/10W
R8355	1-216-817-11	METAL CHIP	470	5%	1/10W
R8356	1-216-835-11	METAL CHIP	15K	5%	1/10W
R8357	1-216-821-11	METAL CHIP	1K	5%	1/10W
R8358	1-216-821-11	METAL CHIP	1K	5%	1/10W
R8360	1-216-821-11	METAL CHIP	1K	5%	1/10W
R8361	1-216-833-11	METAL CHIP	10K	5%	1/10W
R8362	1-216-828-11	METAL CHIP	3.9K	5%	1/10W
R8363	1-216-864-11	SHORT CHIP			
R8364	1-216-864-11	SHORT CHIP			
R8365	1-216-864-11	SHORT CHIP			
R8366	1-216-809-11	METAL CHIP	100	5%	1/10W
R8367	1-216-809-11	METAL CHIP	100	5%	1/10W
R8368	1-216-801-11	METAL CHIP	22	5%	1/10W
R8369	1-216-801-11	METAL CHIP	22	5%	1/10W
R8370	1-216-789-11	METAL CHIP	2.2	5%	1/10W
R8406	1-216-864-11	SHORT CHIP			
R8407	1-216-821-11	METAL CHIP	1K	5%	1/10W
R8408	1-216-864-11	SHORT CHIP			
R8410	1-216-821-11	METAL CHIP	1K	5%	1/10W
R8411	1-216-801-11	METAL CHIP	22	5%	1/10W
R8412	1-216-825-11	METAL CHIP	2.2K	5%	1/10W
R8413	1-216-801-11	METAL CHIP	22	5%	1/10W
R8414	1-216-821-11	METAL CHIP	1K	5%	1/10W
R8415	1-216-811-11	METAL CHIP	150	5%	1/10W
R8436	1-216-825-11	METAL CHIP	2.2K	5%	1/10W
R8437	1-216-825-11	METAL CHIP	2.2K	5%	1/10W
R8438	1-216-833-11	METAL CHIP	10K	5%	1/10W
R8439	1-216-825-11	METAL CHIP	2.2K	5%	1/10W

A

REF. NO.	PART NO.	DESCRIPTION	VALUES		
R8440	1-216-825-11	METAL CHIP	2.2K	5%	1/10W
R8441	1-216-833-11	METAL CHIP	10K	5%	1/10W
R8442	1-216-825-11	METAL CHIP	2.2K	5%	1/10W
R8443	1-216-833-11	METAL CHIP	10K	5%	1/10W
R8515	1-216-864-11	SHORT CHIP			
R8516	1-216-864-11	SHORT CHIP			
R8530	1-216-809-11	METAL CHIP	100	5%	1/10W
R8531	1-216-809-11	METAL CHIP	100	5%	1/10W
R8532	1-216-801-11	METAL CHIP	22	5%	1/10W
R8533	1-216-801-11	METAL CHIP	22	5%	1/10W
R8536	1-216-864-11	SHORT CHIP			
R8543	1-216-825-11	METAL CHIP	2.2K	5%	1/10W
R8544	1-216-825-11	METAL CHIP	2.2K	5%	1/10W
R8545	1-216-823-11	METAL CHIP	1.5K	5%	1/10W
R8547	1-216-823-11	METAL CHIP	1.5K	5%	1/10W
R8548	1-216-825-11	METAL CHIP	2.2K	5%	1/10W
R8549	1-216-864-11	SHORT CHIP			
R8550	1-216-825-11	METAL CHIP	2.2K	5%	1/10W
R8551	1-216-827-11	METAL CHIP	3.3K	5%	1/10W
R8552	1-216-827-11	METAL CHIP	3.3K	5%	1/10W
R8553	1-216-825-11	METAL CHIP	2.2K	5%	1/10W
R8555	1-216-825-11	METAL CHIP	2.2K	5%	1/10W
R8556	1-216-821-11	METAL CHIP	1K	5%	1/10W
R8558	1-216-825-11	METAL CHIP	2.2K	5%	1/10W
R8560	1-216-821-11	METAL CHIP	1K	5%	1/10W
R8561	1-216-825-11	METAL CHIP	2.2K	5%	1/10W
R8562	1-216-825-11	METAL CHIP	2.2K	5%	1/10W
R8563	1-216-825-11	METAL CHIP	2.2K	5%	1/10W
R8564	1-216-827-11	METAL CHIP	3.3K	5%	1/10W
R8565	1-216-827-11	METAL CHIP	3.3K	5%	1/10W
R8566	1-216-825-11	METAL CHIP	2.2K	5%	1/10W
R8567	1-216-825-11	METAL CHIP	2.2K	5%	1/10W
R8568	1-216-864-11	SHORT CHIP			
R8569	1-216-864-11	SHORT CHIP			
R8570	1-218-292-11	METAL CHIP	20K	5%	1/10W
R8571	1-216-827-11	METAL CHIP	3.3K	5%	1/10W
R8572	1-216-827-11	METAL CHIP	3.3K	5%	1/10W
R8573	1-218-292-11	METAL CHIP	20K	5%	1/10W
R8574	1-216-835-11	METAL CHIP	15K	5%	1/10W
R8575	1-216-835-11	METAL CHIP	15K	5%	1/10W
R8576	1-216-801-11	METAL CHIP	22	5%	1/10W
R8577	1-216-801-11	METAL CHIP	22	5%	1/10W
R8578	1-218-292-11	METAL CHIP	20K	5%	1/10W
R8579	1-216-829-11	METAL CHIP	4.7K	5%	1/10W
R8580	1-216-829-11	METAL CHIP	4.7K	5%	1/10W
R8581	1-218-292-11	METAL CHIP	20K	5%	1/10W
R8582	1-216-828-11	METAL CHIP	3.9K	5%	1/10W
R8583	1-216-864-11	SHORT CHIP			

REF. NO.	PART NO.	DESCRIPTION	VALUES		
R8584	1-216-825-11	METAL CHIP	2.2K	5%	1/10W
R8585	1-216-828-11	METAL CHIP	3.9K	5%	1/10W
R8587	1-216-827-11	METAL CHIP	3.3K	5%	1/10W
R8588	1-218-867-11	METAL CHIP	6.8K	0.50%	1/10W
R8589	1-216-864-11	SHORT CHIP			
R8590	1-216-837-11	METAL CHIP	22K	5%	1/10W
R8591	1-216-825-11	METAL CHIP	2.2K	5%	1/10W
R8592	1-216-837-11	METAL CHIP	22K	5%	1/10W
R8593	1-216-827-11	METAL CHIP	3.3K	5%	1/10W
R8594	1-218-867-11	METAL CHIP	6.8K	0.50%	1/10W
R8595	1-216-864-11	SHORT CHIP			
R8596	1-216-834-11	METAL CHIP	12K	5%	1/10W
R8597	1-216-837-11	METAL CHIP	22K	5%	1/10W
R8598	1-216-825-11	METAL CHIP	2.2K	5%	1/10W
R8599	1-216-839-11	METAL CHIP	33K	5%	1/10W
R8600	1-216-840-11	METAL CHIP	39K	5%	1/10W
R8601	1-216-840-11	METAL CHIP	39K	5%	1/10W
R8602	1-216-837-11	METAL CHIP	22K	5%	1/10W
R8603	1-216-829-11	METAL CHIP	4.7K	5%	1/10W
R8604	1-216-841-11	METAL CHIP	47K	5%	1/10W
R8605	1-216-864-11	SHORT CHIP			
R8607	1-216-809-11	METAL CHIP	100	5%	1/10W
R8609	1-216-839-11	METAL CHIP	33K	5%	1/10W
R8610	1-216-839-11	METAL CHIP	33K	5%	1/10W
R8612	1-216-864-11	SHORT CHIP			
R8614	1-216-864-11	SHORT CHIP			
R8616	1-216-839-11	METAL CHIP	33K	5%	1/10W
R8701	1-218-685-11	METAL CHIP	510	0.50%	1/10W
R8703	1-218-692-11	METAL CHIP	1K	0.50%	1/10W
R8704	1-218-864-11	METAL CHIP	5.1K	0.50%	1/10W

TRANSFORMER

TP8001	1-535-877-22	CHIP, CHECKER	

TUNER

TU8001	8-598-594-10	TUNER, FSS BTF-FA421	

VARISTOR

VD8006	1-803-974-21	VARISTOR, CHIP	(1608)
VD8007	1-803-974-21	VARISTOR, CHIP	(1608)
VD8011	1-803-974-21	VARISTOR, CHIP	(1608)
VD8012	1-803-974-21	VARISTOR, CHIP	(1608)
VD8013	1-803-974-21	VARISTOR, CHIP	(1608)
VD8014	1-803-974-21	VARISTOR, CHIP	(1608)
VD8015	1-803-974-21	VARISTOR, CHIP	(1608)

NOTE: The components identified by shading and ⚠ mark are critical for safety. Replace only with part number specified.

NOTE: Les composants identifies per un trame et une marque ⚠ sont critiques pour la securite. Ne les remplacer que par une piece portant le numero specifie.

A F

REF. NO.	PART NO.	DESCRIPTION	VALUES
VD8016	1-803-974-21	VARISTOR, CHIP	(1608)
VD8017	1-803-974-21	VARISTOR, CHIP	(1608)
VD8018	1-803-974-21	VARISTOR, CHIP	(1608)
VD8019	1-803-974-21	VARISTOR, CHIP	(1608)
VD8020	1-803-974-21	VARISTOR, CHIP	(1608)
VD8021	1-803-974-21	VARISTOR, CHIP	(1608)
VD8022	1-803-974-21	VARISTOR, CHIP	(1608)
VD8023	1-803-974-21	VARISTOR, CHIP	(1608)
VD8024	1-803-974-21	VARISTOR, CHIP	(1608)
	CRYSTAL		
X8001	1-781-282-11	VIBRATOR, CERAMIC	
X8301	1-781-132-21	VIBRATOR, CRYSTAL	

F

*		**A-1060-176-A**	**F BOARD, COMPLETE**			
		CAPACITOR				
⚠	C1901	1-161-964-91	CERAMIC	0.0047µF		250V
⚠	C1902	1-161-964-91	CERAMIC	0.0047µF		250V
⚠	C1903	1-165-530-31	MYLAR	0.47µF	10	0V
⚠	C1904	1-161-964-91	CERAMIC	0.0047µF		250V
⚠	C1905	1-161-964-91	CERAMIC	0.0047µF		250V
	C1906	1-107-652-11	ELECT	10µF	20%	250V
	C1907	1-107-974-11	CERAMIC	47pF	5%	2KV
⚠	C1908	1-119-888-51	CERAMIC	2200pF	20%	250V
⚠	C1909	1-119-888-51	CERAMIC	2200pF	20%	250V
	C1910	1-115-872-11	ELECT	2.2µF	20%	50V
	C1911	1-162-964-11	CERAMIC CHIP	0.001µF	10%	50V
	C1912	1-104-331-11	CERAMIC	0.0022µF	10%	1KV
	C1913	1-126-794-11	ELECT	4.7µF	20%	50V
⚠	C1915	1-165-530-31	MYLAR	0.47µF	10	0V
	C1916	1-107-826-11	CERAMIC CHIP	0.1µF	10%	16V
	C1918	1-131-872-91	CERAMIC CHIP	1000pF	10%	630V
	C1919	1-107-884-11	ELECT	1000µF	20%	16V
	C1920	1-107-826-11	CERAMIC CHIP	0.1µF	10%	16V
	C1921	1-126-923-91	ELECT	220µF	20%	10V
	C1922	1-126-947-11	ELECT	47µF	20%	35V
		WIRE PIN				
*	CLP1900	4-042-408-02	PIN(45), WIRE			

REF. NO.	PART NO.	DESCRIPTION	VALUES		
		CONNECTOR			
*⚠ CN1900	1-580-843-11	PIN, CONNECTOR (POWER)			
CN1902	1-695-915-11	TAB (CONTACT)			
CN1903	1-695-915-11	TAB (CONTACT)			
CN1906	1-695-915-11	TAB (CONTACT)			
*⚠ CN1909	1-580-689-31	PIN, CONNECTOR (PC BOARD)	4P		
		DIODE			
⚠ D1900	8-719-077-76	DIODE	D2SB60A-F04		
D1906	8-719-069-55	DIODE	UDZSTE-175.6B		
D1907	6-500-849-01	DIODE	ERA22-08KFLB		
D1908	8-719-404-50	DIODE	MA111-TX		
D1909	6-500-567-31	DIODE	10ERB20-TB3		
D1911	8-719-948-45	DIODE	ERA22-08		
D1912	8-719-028-45	DIODE	D2L20U		
D1913	8-719-404-50	DIODE	MA111-TX		
D1914	8-719-080-75	DIODE	M1FL20U-4063		
		FUSE			
⚠ F1900	1-576-193-11	FUSE	6.3A	1	25V
		FERRITE BEAD			
FB1900	1-469-869-21	FERRITE	0µH		
		FUSE HOLDER			
⚠ FH1900	1-533-223-11	FUSE HOLDER	0A	0V	
⚠ FH1901	1-533-223-11	FUSE HOLDER	0A	0V	
		IC			
IC1900	6-600-279-01	IC	STR-A6169		
IC1901	8-759-682-42	IC	MM1431ATT		
		COIL			
L1900	1-412-537-31	INDUCTOR	100µH		
		PHOTO COUPLER			
⚠ PH1901	8-749-924-35	PHOTO COUPLER	ON3171-R		
⚠ PH1902	8-749-924-35	PHOTO COUPLER	ON3171-R		

NOTE: The components identified by shading and ⚠ mark are critical for safety. Replace only with part number specified.

NOTE: Les composants identifies per un trame et une marque ⚠ sont critiques pour la securite. Ne les remplacer que par une piece portant le numero specifie.

F G1

	REF. NO.	PART NO.	DESCRIPTION	VALUES		
		RESISTOR				
⚠	R1900	1-247-289-00	METAL	8.2M	5%	1W
	R1903	1-219-759-11	METAL	1M	5%	1/2W
	R1904	1-249-389-11	CARBON	4.7	5%	1/4W
	R1905	1-216-150-91	RES-CHIP	10	5%	1/8W
	R1906	1-216-150-91	RES-CHIP	10	5%	1/8W
	R1907	1-216-150-91	RES-CHIP	10	5%	1/8W
	R1908	1-216-150-91	RES-CHIP	10	5%	1/8W
	R1909	1-218-642-11	METAL OXIDE	100K	5%	1W
	R1910	1-216-864-11	SHORT CHIP			
	R1911	1-249-393-11	CARBON	10	5%	1/4W
	R1913	1-202-962-11	CEMENTED	3.3	5%	10W
	R1914	1-216-864-11	SHORT CHIP			
	R1915	1-260-328-11	CARBON	1K	5%	1/2W
	R1916	1-216-829-11	METAL CHIP	4.7K	5%	1/10W
	R1917	1-249-389-11	CARBON	4.7	5%	1/4W
	R1918	1-216-821-11	METAL CHIP	1K	5%	1/10W
	R1919	1-216-817-11	METAL CHIP	470	5%	1/10W
	R1920	1-216-864-11	SHORT CHIP			
	R1921	1-216-829-11	METAL CHIP	4.7K	5%	1/10W
	R1922	1-216-821-11	METAL CHIP	1K	5%	1/10W
	R1923	1-216-839-11	METAL CHIP	33K	5%	1/10W
	R1925	1-218-708-11	METAL CHIP	4.7K	0.50%	1/10W
	R1926	1-218-709-11	METAL CHIP	5.1K	0.50%	1/10W
	R1927	1-249-389-11	CARBON	4.7	5%	1/4W
		RELAY				
⚠	RY1900	1-755-388-11	RELAY (AC POWER)			
⚠	RY1901	1-755-388-11	RELAY (AC POWER)			
		TRANSFORMER				
⚠	T1900	1-456-859-11	LINE FILTER COIL			
⚠	T1901	1-456-859-11	LINE FILTER COIL			
⚠	T1902	1-443-312-11	TRANSFORMER, CONVERTER (SBT)			
		THERMISTOR				
⚠	TH1901	1-803-586-41	THERMISTOR			
		VARISTOR				
⚠	VD1901	1-804-992-21	VARISTOR			
	VD1902	1-804-992-21	VARISTOR			

G1

	REF. NO.	PART NO.	DESCRIPTION	VALUES		
*		**A-1060-177-A**	**G1 BOARD, COMPLETE**			
		4-382-854-01	SCREW (M3X8), P, SW (+)			
		CAPACITOR				
	C1600	1-137-639-21	MYLAR	0.47µF	10%	450V
	C1601	1-162-964-11	CERAMIC CHIP	0.001µF	10%	50V
	C1602	1-126-967-11	ELECT	47µF	20%	50V
	C1604	1-126-959-11	ELECT	0.47µF	20%	50V
	C1605	1-126-964-11	ELECT	10µF	20%	50V
	C1606	1-162-970-11	CERAMIC CHIP	0.01µF	10%	25V
	C1607	1-100-831-91	CERAMIC CHIP	0.001µF	2%	50V
	C1608	1-162-970-11	CERAMIC CHIP	0.01µF	10%	25V
	C1609	1-136-497-81	FILM	0.1µF	5%	50V
	C1610	1-126-947-11	ELECT	47µF	20%	35V
	C1614	1-117-219-11	CERAMIC	68pF	5%	1KV
	C1615	1-117-219-11	CERAMIC	68pF	5%	1KV
	C1616	1-100-624-11	FILM	4700pF	3%	800V
	C1617	1-126-968-11	ELECT	100µF	20%	50V
	C1618	1-135-372-31	ELECT	470µF	20%	10V
	C1620	1-128-951-31	ELECT	2200µF	20%	16V
	C1621	1-126-933-11	ELECT	100µF	20%	16V
	C1623	1-162-970-11	CERAMIC CHIP	0.01µF	10%	25V
	C1624	1-126-935-11	ELECT	470µF	20%	16V
	C1627	1-126-933-11	ELECT	100µF	20%	16V
⚠	C1629	1-161-964-91	CERAMIC	0.0047µF		250V
⚠	C1630	1-161-964-91	CERAMIC	0.0047µF		250V
⚠	C1631	1-161-964-91	CERAMIC	0.0047µF		250V
⚠	C1632	1-161-964-91	CERAMIC	0.0047µF		250V
	C1647	1-107-826-11	CERAMIC CHIP	0.1µF	10%	16V
	C1649	1-162-970-11	CERAMIC CHIP	0.01µF	10%	25V
	C1650	1-107-909-11	ELECT	47µF	20%	50V
	C1651	1-107-904-11	ELECT	3.3µF	20%	50V
	C1652	1-162-970-11	CERAMIC CHIP	0.01µF	10%	25V
	C1653	1-100-831-91	CERAMIC CHIP	0.001µF	2%	50V
	C1655	1-107-906-11	ELECT	10µF	20%	50V
	C1657	1-162-970-11	CERAMIC CHIP	0.01µF	10%	25V
	C1658	1-136-497-81	FILM	0.1µF	5%	50V
	C1659	1-107-888-11	ELECT	47µF	20%	25V
	C1660	1-107-826-11	CERAMIC CHIP	0.1µF	10%	16V
	C1661	1-107-824-11	CERAMIC	220pF	5%	1KV
	C1662	1-107-824-11	CERAMIC	220pF	5%	1KV
	C1663	1-165-954-11	FILM	56000pF	3%	800V
	C1664	1-107-894-11	ELECT	220µF	20%	35V
	C1665	1-107-905-11	ELECT	4.7µF	20%	50V

NOTE: The components identified by shading and ⚠ mark are critical for safety. Replace only with part number specified.

NOTE: Les composants identifies per un trame et une marque ⚠ sont critiques pour la securite. Ne les remplacer que par une piece portant le numero specifie.

G1

	REF. NO.	PART NO.	DESCRIPTION	VALUES		
	C1668	1-107-905-11	ELECT	4.7µF	20%	50V
	C1669	1-107-826-11	CERAMIC CHIP	0.1µF	10%	16V
	C1670	1-162-970-11	CERAMIC CHIP	0.01µF	10%	25V
	C1671	1-126-967-11	ELECT	47µF	20%	50V
	C1673	1-165-733-31	ELECT	100µF	20%	25V
⚠	C1674	1-165-530-31	MYLAR	0.47µF	10	0V
	C1676	1-137-921-31	ELECT	1500µF	20%	10V
	C1677	1-131-975-11	ELECT	1200µF	20%	10V
	C1678	1-128-951-31	ELECT	2200µF	20%	16V
	C1679	1-128-950-31	ELECT	1000µF	20%	16V
	C1680	1-128-582-11	ELECT	10µF	20%	100V
	C1681	1-137-190-91	FILM	0.22µF	5%	50V
	C1683	1-126-768-11	ELECT	2200µF	20%	16V
	C1684	1-126-767-11	ELECT	1000µF	20%	16V
	C1687	1-162-964-11	CERAMIC CHIP	0.001µF	10%	50V
	C1688	1-162-964-11	CERAMIC CHIP	0.001µF	10%	50V
	C1689	1-162-964-11	CERAMIC CHIP	0.001µF	10%	50V
	C1694	1-128-955-31	ELECT	2200µF	20%	25V
	C1695	1-162-964-11	CERAMIC CHIP	0.001µF	10%	50V
⚠	C1706	1-137-750-11	ELECT	1500µF	20%	250V
⚠	C1707	1-137-750-11	ELECT	1500µF	20%	250V
	C1712	1-100-714-11	ELECT	100µF	20%	400V
	C1713	1-100-714-11	ELECT	100µF	20%	400V
	C1714	1-161-830-00	CERAMIC	0.0047µF		500V
	C1715	1-126-964-11	ELECT	10µF	20%	50V
	C1716	1-128-581-11	ELECT	4.7µF	20%	100V
	C1717	1-137-190-91	FILM	0.22µF	5%	50V

WIRE PIN

*	CLP1600	4-042-408-02	PIN(45), WIRE

CONNECTOR

*⚠	CN1601	1-580-689-11	PIN, CONNECTOR (PC BOARD)	4P
*	CN1602	1-691-960-21	PIN, CONNECTOR (PC BOARD)	3P
	CN1603	1-764-101-11	PIN, CONNECTOR (PC BOARD)	2P
*	CN1605	1-793-923-11	CONNECTOR, DIN (PLUG)	64P
	CN1607	1-695-915-11	TAB (CONTACT)	

DIODE

	D1600	8-719-082-03	DIODE	MM3Z15VT1
	D1601	8-719-083-78	DIODE	10ERA60-TP
	D1602	8-719-082-03	DIODE	MM3Z15VT1
	D1603	8-719-082-03	DIODE	MM3Z15VT1
	D1604	8-719-082-03	DIODE	MM3Z15VT1
	D1605	8-719-082-03	DIODE	MM3Z15VT1
	D1607	6-500-567-21	DIODE	10ERB20-TB5
	D1608	8-719-022-97	DIODE	D2S4UF
	D1609	8-719-510-12	DIODE	D10SC4M
	D1610	8-719-068-71	DIODE	PTZ-TE25-13A
⚠	D1611	8-719-026-63	DIODE	D10XB60S
	D1619	8-719-082-03	DIODE	MM3Z15VT1
	D1620	8-719-082-03	DIODE	MM3Z15VT1
	D1621	8-719-082-03	DIODE	MM3Z15VT1
	D1622	8-719-979-64	DIODE	µF4005PKG23
	D1623	8-719-082-03	DIODE	MM3Z15VT1
	D1624	8-719-082-03	DIODE	MM3Z15VT1
	D1625	8-719-081-97	DIODE	MMDL914T1
	D1626	6-500-567-31	DIODE	10ERB20-TB3
	D1627	8-719-081-97	DIODE	MMDL914T1
	D1629	8-719-028-45	DIODE	D2L20U
	D1630	8-719-510-12	DIODE	D10SC4M
	D1631	8-719-510-12	DIODE	D10SC4M
	D1632	8-719-404-50	DIODE	MA111-TX
	D1633	8-719-510-12	DIODE	D10SC4M
	D1634	8-719-510-12	DIODE	D10SC4M
	D1635	8-719-063-73	DIODE	D1NL20U-TR
	D1636	8-719-404-50	DIODE	MA111-TX
	D1637	8-719-404-50	DIODE	MA111-TX
	D1638	8-719-404-50	DIODE	MA111-TX
	D1639	8-719-404-50	DIODE	MA111-TX
⚠	D1640	8-719-060-89	DIODE	D4SBS6-F
	D1641	8-719-063-73	DIODE	D1NL20U-TR
	D1643	8-719-068-00	DIODE	ERC04-06SE
	D1644	8-719-068-00	DIODE	ERC04-06SE
	D1645	8-719-064-49	DIODE	D4SBL40
	D1646	6-500-567-21	DIODE	10ERB20-TB5
	D1647	8-719-983-37	DIODE	MTZJ-T-77-36A

FERRITE BEAD

FB1600	1-410-397-21	FERRITE	1.1µH
FB1606	1-410-397-21	FERRITE	1.1µH

IC

IC1600	6-705-810-01	IC	MCZ3001DB
IC1601	8-759-586-17	IC	TL1431CZ-AP
IC1602	8-759-470-65	IC	PQ05RD1B
IC1606	6-705-810-01	IC	MCZ3001DB
IC1607	8-759-682-42	IC	MM1431ATT
IC1608	6-705-958-01	IC	PQ15RW21J00H
IC1609	6-705-958-01	IC	PQ15RW21J00H

NOTE: The components identified by shading and ⚠ mark are critical for safety. Replace only with part number specified.

NOTE: Les composants identifies per un trame et une marque ⚠ sont critiques pour la securite. Ne les remplacer que par une piece portant le numero specifie.

G1

REF. NO.	PART NO.	DESCRIPTION	VALUES		
	COIL				
L1600	1-412-537-31	INDUCTOR	100µH		
L1601	1-412-525-31	INDUCTOR	10µH		
L1602	1-406-659-11	INDUCTOR	10µH		
L1603	1-412-519-11	INDUCTOR	3.3µH		
L1607	1-412-525-31	INDUCTOR	10µH		
L1611	1-412-525-31	INDUCTOR	10µH		
L1614	1-412-519-11	INDUCTOR	3.3µH		
L1616	1-406-983-11	INDUCTOR	1MH		
	PHOTO COUPLER				
⚠ PH1600	8-749-924-35	PHOTO COUPLER	ON3171-R		
⚠ PH1602	8-749-924-35	PHOTO COUPLER	ON3171-R		
⚠ PH1603	8-749-924-35	PHOTO COUPLER	ON3171-R		
	TRANSISTOR				
Q1600	8-729-052-29	TRANSISTOR	2SK2876-01MR-F122		
Q1601	8-729-052-29	TRANSISTOR	2SK2876-01MR-F122		
Q1602	8-729-140-96	TRANSISTOR	2SD774-34		
Q1606	8-729-120-28	TRANSISTOR	2SC1623-L5L6		
Q1609	8-729-120-28	TRANSISTOR	2SC1623-L5L6		
Q1612	8-729-120-28	TRANSISTOR	2SC1623-L5L6		
Q1613	6-550-526-11	TRANSISTOR	2SK2842(LBS2SONY)		
Q1614	6-550-526-11	TRANSISTOR	2SK2842(LBS2SONY)		
Q1615	8-729-120-28	TRANSISTOR	2SC1623-L5L6		
Q1616	8-729-026-49	TRANSISTOR	2SA1037AK-T146-R		
Q1617	8-729-120-28	TRANSISTOR	2SC1623-L5L6		
	RESISTOR				
R1600	1-218-869-11	METAL CHIP	8.2K	0.50%	1/10W
R1602	1-218-837-11	METAL CHIP	390	0.50%	1/10W
R1603	1-245-478-21	METAL	470K	1%	1/4W
R1605	1-218-873-11	METAL CHIP	12K	0.50%	1/10W
R1606	1-245-478-21	METAL	470K	1%	1/4W
R1607	1-218-823-11	METAL CHIP	100	0.50%	1/10W
R1608	1-212-897-00	FUSIBLE	470	5%	1/4W
R1609	1-249-393-11	CARBON	10	5%	1/4W
R1610	1-249-393-11	CARBON	10	5%	1/4W
R1611	1-216-833-11	METAL CHIP	10K	5%	1/10W
R1612	1-216-833-11	METAL CHIP	10K	5%	1/10W
R1614	1-220-926-81	FUSIBLE	0.47	10%	1/2W
R1615	1-216-864-11	SHORT CHIP			
R1616	1-216-817-11	METAL CHIP	470	5%	1/10W
R1617	1-243-944-71	METAL	0.33	5%	2W

REF. NO.	PART NO.	DESCRIPTION	VALUES		
R1619	1-216-821-11	METAL CHIP	1K	5%	1/10W
R1620	1-216-864-11	SHORT CHIP			
R1621	1-216-821-11	METAL CHIP	1K	5%	1/10W
R1622	1-249-393-11	CARBON	10	5%	1/4W
R1623	1-216-833-11	METAL CHIP	10K	5%	1/10W
R1625	1-218-867-11	METAL CHIP	6.8K	0.50%	1/10W
R1626	1-218-877-11	METAL CHIP	18K	0.50%	1/10W
R1628	1-216-295-91	SHORT CHIP			
R1629	1-216-295-91	SHORT CHIP			
R1630	1-216-295-91	SHORT CHIP			
R1654	1-260-288-11	CARBON	0.47	5%	1/2W
R1655	1-260-288-11	CARBON	0.47	5%	1/2W
R1656	1-215-904-11	METAL OXIDE	100K	5%	2W
R1657	1-215-904-11	METAL OXIDE	100K	5%	2W
R1668	1-216-837-11	METAL CHIP	22K	5%	1/10W
R1669	1-216-833-11	METAL CHIP	10K	5%	1/10W
R1670	1-202-933-61	FUSIBLE	0.1	10%	1/2W
R1672	1-216-833-11	METAL CHIP	10K	5%	1/10W
R1673	1-218-823-11	METAL CHIP	100	0.50%	1/10W
R1674	1-218-870-11	METAL CHIP	9.1K	0.50%	1/10W
R1680	1-216-864-11	SHORT CHIP			
R1681	1-216-833-11	METAL CHIP	10K	5%	1/10W
R1682	1-216-864-11	SHORT CHIP			
R1683	1-245-472-21	METAL	270K	1%	1/4W
R1684	1-245-471-21	METAL	240K	1%	1/4W
R1685	1-245-471-21	METAL	240K	1%	1/4W
R1686	1-245-471-21	METAL	240K	1%	1/4W
R1689	1-218-877-11	METAL CHIP	18K	0.50%	1/10W
R1691	1-216-845-11	METAL CHIP	100K	5%	1/10W
R1696	1-211-991-11	METAL CHIP	82	0.50%	1/10W
R1697	1-212-897-00	FUSIBLE	470	5%	1/4W
R1700	1-216-821-11	METAL CHIP	1K	5%	1/10W
R1701	1-249-393-11	CARBON	10	5%	1/4W
R1702	1-249-393-11	CARBON	10	5%	1/4W
R1703	1-216-864-11	SHORT CHIP			
R1704	1-218-871-11	METAL CHIP	10K	0.50%	1/10W
R1705	1-218-871-11	METAL CHIP	10K	0.50%	1/10W
R1706	1-216-833-11	METAL CHIP	10K	5%	1/10W
R1707	1-216-833-11	METAL CHIP	10K	5%	1/10W
R1710	1-216-817-11	METAL CHIP	470	5%	1/10W
R1711	1-243-660-71	METAL	0.05	5%	2W
R1712	1-249-385-11	CARBON	2.2	5%	1/4W
R1713	1-216-864-11	SHORT CHIP			
R1714	1-216-829-11	METAL CHIP	4.7K	5%	1/10W
R1715	1-216-833-11	METAL CHIP	10K	5%	1/10W
R1716	1-216-833-11	METAL CHIP	10K	5%	1/10W
R1717	1-216-821-11	METAL CHIP	1K	5%	1/10W
R1718	1-216-821-11	METAL CHIP	1K	5%	1/10W

NOTE: The components identified by shading and ⚠ mark are critical for safety. Replace only with part number specified.

NOTE: Les composants identifies per un trame et une marque ⚠ sont critiques pour la securite. Ne les remplacer que par une piece portant le numero specifie.

G1 G2

REF. NO.	PART NO.	DESCRIPTION	VALUES		
R1719	1-216-821-11	METAL CHIP	1K	5%	1/10W
R1722	1-216-864-11	SHORT CHIP			
R1723	1-249-377-11	CARBON	0.47	5%	1/4W
R1724	1-216-833-11	METAL CHIP	10K	5%	1/10W
R1725	1-218-696-11	METAL CHIP	1.5K	0.50%	1/10W
R1726	1-218-724-11	METAL CHIP	22K	0.50%	1/10W
R1728	1-218-847-11	METAL CHIP	1K	0.50%	1/10W
R1731	1-218-720-11	METAL CHIP	15K	0.50%	1/10W
R1733	1-218-726-11	METAL CHIP	27K	0.50%	1/10W
R1734	1-218-692-11	METAL CHIP	1K	0.50%	1/10W
R1735	1-218-692-11	METAL CHIP	1K	0.50%	1/10W
R1736	1-218-692-11	METAL CHIP	1K	0.50%	1/10W
R1737	1-218-702-11	METAL CHIP	2.7K	0.50%	1/10W
R1740	1-216-350-11	METAL OXIDE	1.2	5%	1W
R1752	1-260-131-11	CARBON	470K	5%	1/2W
R1753	1-260-131-11	CARBON	470K	5%	1/2W
R1754	1-202-933-61	FUSIBLE	0.1	10%	1/2W
R1755	1-249-393-11	CARBON	10	5%	1/4W
R1756	1-216-829-11	METAL CHIP	4.7K	5%	1/10W

TRANSFORMER

⚠	T1601	1-443-444-11	CONVERTER TRANSFORMER (PIT)
⚠	T1602	1-439-879-11	TRANSFORMER, CONVERTER (PIT)

G2

*	A-1060-178-B	G2 BOARD, COMPLETE	

CAPACITOR

REF. NO.	PART NO.	DESCRIPTION	VALUES		
C6005	1-107-826-11	CERAMIC CHIP	0.1µF	10%	16V
C6006	1-124-779-00	ELECT CHIP	10µF	20%	16V
C6010	1-128-995-21	ELECT CHIP	100µF	20%	10V
C6012	1-164-156-11	CERAMIC CHIP	0.1µF		25V
C6013	1-128-992-21	ELECT CHIP	47µF	20%	25V
C6014	1-164-156-11	CERAMIC CHIP	0.1µF		25V
C6015	1-128-992-21	ELECT CHIP	47µF	20%	25V
C6016	1-164-156-11	CERAMIC CHIP	0.1µF		25V
C6017	1-164-156-11	CERAMIC CHIP	0.1µF		25V
C6018	1-164-156-11	CERAMIC CHIP	0.1µF		25V
C6019	1-128-991-21	ELECT CHIP	10µF	20%	50V
C6020	1-164-156-11	CERAMIC CHIP	0.1µF		25V
C6021	1-128-992-21	ELECT CHIP	47µF	20%	25V
C6022	1-164-156-11	CERAMIC CHIP	0.1µF		25V
C6023	1-164-156-11	CERAMIC CHIP	0.1µF		25V
C6024	1-128-992-21	ELECT CHIP	47µF	20%	25V
C6025	1-164-156-11	CERAMIC CHIP	0.1µF		25V
C6026	1-164-156-11	CERAMIC CHIP	0.1µF		25V
C6027	1-128-992-21	ELECT CHIP	47µF	20%	25V
C6028	1-128-992-21	ELECT CHIP	47µF	20%	25V
C6029	1-164-156-11	CERAMIC CHIP	0.1µF		25V
C6030	1-164-156-11	CERAMIC CHIP	0.1µF		25V
C6031	1-128-992-21	ELECT CHIP	47µF	20%	25V
C6032	1-128-992-21	ELECT CHIP	47µF	20%	25V
C6033	1-107-826-11	CERAMIC CHIP	0.1µF	10%	16V
C6034	1-107-826-11	CERAMIC CHIP	0.1µF	10%	16V
C6036	1-128-992-21	ELECT CHIP	47µF	20%	25V
C6038	1-128-992-21	ELECT CHIP	47µF	20%	25V
C6039	1-164-156-11	CERAMIC CHIP	0.1µF		25V
C6041	1-127-931-21	ELECT CHIP	470µF	20%	16V
C6042	1-127-931-21	ELECT CHIP	470µF	20%	16V
C6044	1-162-970-11	CERAMIC CHIP	0.01µF	10%	25V
C6045	1-107-826-11	CERAMIC CHIP	0.1µF	10%	16V
C6047	1-125-837-91	CERAMIC CHIP	1µF	10%	6.3V
C6048	1-162-970-11	CERAMIC CHIP	0.01µF	10%	25V
C6049	1-107-826-11	CERAMIC CHIP	0.1µF	10%	16V
C6901	1-107-826-11	CERAMIC CHIP	0.1µF	10%	16V
C6902	1-107-826-11	CERAMIC CHIP	0.1µF	10%	16V
C6904	1-107-826-11	CERAMIC CHIP	0.1µF	10%	16V
C6905	1-107-826-11	CERAMIC CHIP	0.1µF	10%	16V
C6907	1-162-916-11	CERAMIC CHIP	12pF	5%	50V
C6908	1-162-916-11	CERAMIC CHIP	12pF	5%	50V
C6909	1-107-826-11	CERAMIC CHIP	0.1µF	10%	16V
C6910	1-162-970-11	CERAMIC CHIP	0.01µF	10%	25V
C6912	1-162-927-11	CERAMIC CHIP	100pF	5%	50V
C6913	1-162-964-11	CERAMIC CHIP	0.001µF	10%	50V
C6914	1-107-826-11	CERAMIC CHIP	0.1µF	10%	16V
C6915	1-162-970-11	CERAMIC CHIP	0.01µF	10%	25V
C6917	1-107-826-11	CERAMIC CHIP	0.1µF	10%	16V
C6918	1-162-970-11	CERAMIC CHIP	0.01µF	10%	25V
C6919	1-107-826-11	CERAMIC CHIP	0.1µF	10%	16V
C6920	1-107-826-11	CERAMIC CHIP	0.1µF	10%	16V
C6923	1-107-826-11	CERAMIC CHIP	0.1µF	10%	16V

CONNECTOR

*	CN6000	1-818-747-11	PIN, CONNECTOR	12P
	CN6002	1-816-112-11	CONNECTOR, SQUARE TYPE (USB)	5P
	CN6003	1-816-112-11	CONNECTOR, SQUARE TYPE (USB)	5P
*	CN6004	1-764-812-12	CONNECTOR, BOARD TO BOARD	11P
*	CN6005	1-793-922-11	CONNECTOR, DIN (RECEPTACLE)	64P
	CN6013	1-695-915-11	TAB (CONTACT)	
	CN6015	1-695-915-11	TAB (CONTACT)	
	CN6017	1-750-710-11	CONNECTOR, BOARD TO BOARD	19P
	CN6018	1-695-915-11	TAB (CONTACT)	
	CN6019	1-816-957-11	DIN CONNECTOR (RECEPTACLE)	96P

G2

	REF. NO.	PART NO.	DESCRIPTION	VALUES
	CN6020	1-816-957-11	DIN CONNECTOR (RECEPTACLE)	96P
*	CN6021	1-816-124-11	PIN, CONNECTOR (FOR PWB)	18P
*	CN6022	1-785-519-11	PIN, CONNECTOR (PC BOARD)	24P
*	CN6023	1-818-762-11	PIN, CONNECTOR (PC BOARD)	26P
*	CN6024	1-785-533-11	PIN, CONNECTOR (PC BOARD)	16P
*	CN6028	1-785-530-11	PIN, CONNECTOR (PC BOARD)	10P
*	CN6029	1-823-330-11	CONNECTOR, BOARD TO BOARD	40P
*	CN6030	1-537-738-21	TERMINAL, EARTH	
*	CN6031	1-537-738-21	TERMINAL, EARTH	
*	CN6032	1-537-738-21	TERMINAL, EARTH	
	CN6033	1-770-722-11	CONNECTOR, BOARD TO BOARD	6P
*	CN6900	1-691-551-11	PIN, CONNECTOR (SMD)	8P

DIODE

REF. NO.	PART NO.	DESCRIPTION	VALUES
D6002	8-719-404-50	DIODE	MA111-TX
D6003	8-719-404-50	DIODE	MA111-TX
D6004	8-719-404-50	DIODE	MA111-TX
D6005	8-719-914-43	DIODE	DAN202K
D6006	8-719-404-50	DIODE	MA111-TX
D6007	8-719-404-50	DIODE	MA111-TX
D6008	8-719-404-50	DIODE	MA111-TX
D6009	8-719-404-50	DIODE	MA111-TX
D6011	8-719-404-50	DIODE	MA111-TX
D6012	8-719-404-50	DIODE	MA111-TX
D6013	8-719-404-50	DIODE	MA111-TX
D6014	8-719-404-50	DIODE	MA111-TX
D6015	8-719-404-50	DIODE	MA111-TX
D6016	8-719-914-43	DIODE	DAN202K
D6017	8-719-977-28	DIODE	DTZ10B
D6018	8-719-082-03	DIODE	MM3Z15VT1
D6019	8-719-404-50	DIODE	MA111-TX
D6020	8-719-404-50	DIODE	MA111-TX
D6901	8-719-050-37	DIODE	M1MA152WA-T1
D6902	8-719-050-38	DIODE	M1MA152WK-T1
D6904	8-719-025-31	DIODE	02CZ5.6-TE85L
D6905	8-719-404-50	DIODE	MA111-TX

FERRITE BEAD

REF. NO.	PART NO.	DESCRIPTION	VALUES
FB6000	1-414-921-11	FERRITE	0µH
FB6001	1-216-295-91	SHORT CHIP	
FB6002	1-216-295-91	SHORT CHIP	
FB6003	1-414-921-11	FERRITE	0µH
FB6004	1-469-869-21	FERRITE	0µH
FB6005	1-469-869-21	FERRITE	0µH
FB6006	1-469-869-21	FERRITE	0µH
FB6007	1-500-329-21	FERRITE	0µH

IC

REF. NO.	PART NO.	DESCRIPTION	VALUES
IC6002	6-705-025-01	IC	PQ20WZ1UJ00H
IC6003	8-752-072-94	IC	CXA1875AM-T4
IC6004	6-705-025-01	IC	PQ20WZ1UJ00H
IC6005	6-705-025-01	IC	PQ20WZ1UJ00H
IC6006	6-706-481-01	IC	TC7SET32FU(T5RSOJF)
IC6007	6-706-481-01	IC	TC7SET32FU(T5RSOJF)
IC6008	6-705-025-01	IC	PQ20WZ1UJ00H
IC6010	6-703-076-01	IC	XC6204B332MR
IC6902	6-804-936-01	IC	MB90F334APMC-GE1-GW03
IC6904	6-703-176-01	IC	PST3627UL
IC6905	6-706-487-01	IC	TC7SH08FU(T5RSOYJF)
IC6907	6-706-487-01	IC	TC7SH08FU(T5RSOYJF)
IC6908	6-706-487-01	IC	TC7SH08FU(T5RSOYJF)
IC6909	6-706-481-01	IC	TC7SET32FU(T5RSOJF)

COIL

REF. NO.	PART NO.	DESCRIPTION	VALUES
L6000	1-414-857-11	INDUCTOR	100µH
L6001	1-414-857-11	INDUCTOR	100µH

TRANSISTOR

REF. NO.	PART NO.	DESCRIPTION	VALUES
Q6000	8-729-422-33	TRANSISTOR	2SD601A-Q-TX
Q6001	8-729-216-22	TRANSISTOR	2SA1162-G
Q6002	8-729-422-33	TRANSISTOR	2SD601A-Q-TX
Q6003	8-729-216-22	TRANSISTOR	2SA1162-G
Q6005	8-729-422-33	TRANSISTOR	2SD601A-Q-TX
Q6006	8-729-216-22	TRANSISTOR	2SA1162-G
Q6007	8-729-027-43	TRANSISTOR	DTC114EKA-T146
Q6008	8-729-216-22	TRANSISTOR	2SA1162-G
Q6009	8-729-422-33	TRANSISTOR	2SD601A-Q-TX
Q6010	8-729-422-33	TRANSISTOR	2SD601A-Q-TX
Q6011	8-729-422-33	TRANSISTOR	2SD601A-Q-TX
Q6012	8-729-422-33	TRANSISTOR	2SD601A-Q-TX
Q6014	8-729-027-43	TRANSISTOR	DTC114EKA-T146
Q6015	8-729-027-43	TRANSISTOR	DTC114EKA-T146
Q6901	8-729-028-28	TRANSISTOR	2SK2036(TE85L)
Q6902	8-729-028-28	TRANSISTOR	2SK2036(TE85L)
Q6904	8-729-422-33	TRANSISTOR	2SD601A-Q-TX
Q6905	8-729-216-22	TRANSISTOR	2SA1162-G
Q6906	8-729-027-43	TRANSISTOR	DTC114EKA-T146
Q6907	8-729-422-33	TRANSISTOR	2SD601A-Q-TX
Q6908	8-729-422-33	TRANSISTOR	2SD601A-Q-TX
Q6909	8-729-422-33	TRANSISTOR	2SD601A-Q-TX
Q6910	8-729-216-22	TRANSISTOR	2SA1162-G
Q6912	8-729-422-33	TRANSISTOR	2SD601A-Q-TX
Q6913	8-729-216-22	TRANSISTOR	2SA1162-G

G2

REF. NO.	PART NO.	DESCRIPTION	VALUES		
Q6914	8-729-216-22	TRANSISTOR	2SA1162-G		
Q6915	8-729-422-33	TRANSISTOR	2SD601A-Q-TX		
Q6916	8-729-422-33	TRANSISTOR	2SD601A-Q-TX		
Q6917	8-729-422-33	TRANSISTOR	2SD601A-Q-TX		
	RESISTOR				
R6001	1-216-809-11	METAL CHIP	100	5%	1/10W
R6002	1-216-809-11	METAL CHIP	100	5%	1/10W
R6003	1-216-864-11	SHORT CHIP			
R6004	1-216-864-11	SHORT CHIP			
R6005	1-216-864-11	SHORT CHIP			
R6006	1-216-833-11	METAL CHIP	10K	5%	1/10W
R6008	1-216-820-11	METAL CHIP	820	5%	1/10W
R6010	1-216-864-11	SHORT CHIP			
R6019	1-216-845-11	METAL CHIP	100K	5%	1/10W
R6020	1-216-797-11	METAL CHIP	10	5%	1/10W
R6021	1-216-821-11	METAL CHIP	1K	5%	1/10W
R6022	1-218-867-11	METAL CHIP	6.8K	0.50%	1/10W
R6023	1-216-833-11	METAL CHIP	10K	5%	1/10W
R6024	1-216-845-11	METAL CHIP	100K	5%	1/10W
R6025	1-216-833-11	METAL CHIP	10K	5%	1/10W
R6026	1-216-864-11	SHORT CHIP			
R6028	1-218-716-11	METAL CHIP	10K	0.50%	1/10W
R6029	1-216-845-11	METAL CHIP	100K	5%	1/10W
R6030	1-216-864-11	SHORT CHIP			
R6031	1-216-833-11	METAL CHIP	10K	5%	1/10W
R6032	1-216-864-11	SHORT CHIP			
R6033	1-216-833-11	METAL CHIP	10K	5%	1/10W
R6034	1-216-797-11	METAL CHIP	10	5%	1/10W
R6035	1-216-801-11	METAL CHIP	22	5%	1/10W
R6036	1-216-833-11	METAL CHIP	10K	5%	1/10W
R6037	1-216-821-11	METAL CHIP	1K	5%	1/10W
R6038	1-216-801-11	METAL CHIP	22	5%	1/10W
R6039	1-216-833-11	METAL CHIP	10K	5%	1/10W
R6040	1-218-722-11	METAL CHIP	18K	0.50%	1/10W
R6041	1-216-833-11	METAL CHIP	10K	5%	1/10W
R6042	1-218-867-11	METAL CHIP	6.8K	0.50%	1/10W
R6043	1-216-845-11	METAL CHIP	100K	5%	1/10W
R6044	1-216-821-11	METAL CHIP	1K	5%	1/10W
R6045	1-216-845-11	METAL CHIP	100K	5%	1/10W
R6046	1-216-797-11	METAL CHIP	10	5%	1/10W
R6047	1-216-864-11	SHORT CHIP			
R6050	1-218-716-11	METAL CHIP	10K	0.50%	1/10W
R6051	1-216-845-11	METAL CHIP	100K	5%	1/10W
R6052	1-218-867-11	METAL CHIP	6.8K	0.50%	1/10W
R6053	1-218-722-11	METAL CHIP	18K	0.50%	1/10W

REF. NO.	PART NO.	DESCRIPTION	VALUES		
R6054	1-216-864-11	SHORT CHIP			
R6055	1-216-824-11	METAL CHIP	1.8K	5%	1/10W
R6057	1-218-716-11	METAL CHIP	10K	0.50%	1/10W
R6058	1-218-722-11	METAL CHIP	18K	0.50%	1/10W
R6059	1-216-833-11	METAL CHIP	10K	5%	1/10W
R6060	1-216-809-11	METAL CHIP	100	5%	1/10W
R6061	1-216-833-11	METAL CHIP	10K	5%	1/10W
R6062	1-216-809-11	METAL CHIP	100	5%	1/10W
R6063	1-216-845-11	METAL CHIP	100K	5%	1/10W
R6065	1-218-716-11	METAL CHIP	10K	0.50%	1/10W
R6070	1-218-722-11	METAL CHIP	18K	0.50%	1/10W
R6071	1-216-801-11	METAL CHIP	22	5%	1/10W
R6072	1-216-801-11	METAL CHIP	22	5%	1/10W
R6073	1-216-864-11	SHORT CHIP			
R6074	1-216-864-11	SHORT CHIP			
R6078	1-216-833-11	METAL CHIP	10K	5%	1/10W
R6079	1-216-833-11	METAL CHIP	10K	5%	1/10W
R6080	1-216-833-11	METAL CHIP	10K	5%	1/10W
R6081	1-216-833-11	METAL CHIP	10K	5%	1/10W
R6082	1-216-833-11	METAL CHIP	10K	5%	1/10W
R6083	1-216-825-11	METAL CHIP	2.2K	5%	1/10W
R6084	1-216-833-11	METAL CHIP	10K	5%	1/10W
R6085	1-216-833-11	METAL CHIP	10K	5%	1/10W
R6086	1-216-825-11	METAL CHIP	2.2K	5%	1/10W
R6088	1-216-864-11	SHORT CHIP			
R6089	1-216-864-11	SHORT CHIP			
R6091	1-216-833-11	METAL CHIP	10K	5%	1/10W
R6099	1-216-864-11	SHORT CHIP			
R6100	1-216-864-11	SHORT CHIP			
R6101	1-216-864-11	SHORT CHIP			
R6102	1-216-864-11	SHORT CHIP			
R6103	1-216-864-11	SHORT CHIP			
R6105	1-216-864-11	SHORT CHIP			
R6106	1-216-864-11	SHORT CHIP			
R6107	1-216-864-11	SHORT CHIP			
R6108	1-216-864-11	SHORT CHIP			
R6110	1-216-814-11	METAL CHIP	270	5%	1/10W
R6111	1-216-864-11	SHORT CHIP			
R6112	1-216-864-11	SHORT CHIP			
R6113	1-216-864-11	SHORT CHIP			
R6114	1-216-864-11	SHORT CHIP			
R6115	1-216-864-11	SHORT CHIP			
R6116	1-216-864-11	SHORT CHIP			
R6117	1-216-864-11	SHORT CHIP			
R6118	1-216-864-11	SHORT CHIP			
R6119	1-216-864-11	SHORT CHIP			
R6120	1-216-864-11	SHORT CHIP			
R6121	1-216-864-11	SHORT CHIP			

G2

REF. NO.	PART NO.	DESCRIPTION	VALUES		
R6122	1-216-864-11	SHORT CHIP			
R6123	1-216-864-11	SHORT CHIP			
R6126	1-216-864-11	SHORT CHIP			
R6127	1-216-864-11	SHORT CHIP			
R6128	1-216-864-11	SHORT CHIP			
R6129	1-216-864-11	SHORT CHIP			
R6130	1-216-864-11	SHORT CHIP			
R6131	1-216-864-11	SHORT CHIP			
R6134	1-216-864-11	SHORT CHIP			
R6135	1-216-864-11	SHORT CHIP			
R6136	1-216-864-11	SHORT CHIP			
R6137	1-216-864-11	SHORT CHIP			
R6138	1-216-864-11	SHORT CHIP			
R6143	1-216-864-11	SHORT CHIP			
R6144	1-216-864-11	SHORT CHIP			
R6145	1-216-864-11	SHORT CHIP			
R6146	1-216-833-11	METAL CHIP	10K	5%	1/10W
R6153	1-216-864-11	SHORT CHIP			
R6154	1-216-864-11	SHORT CHIP			
R6155	1-216-864-11	SHORT CHIP			
R6156	1-216-864-11	SHORT CHIP			
R6157	1-216-864-11	SHORT CHIP			
R6158	1-216-864-11	SHORT CHIP			
R6159	1-216-864-11	SHORT CHIP			
R6160	1-216-864-11	SHORT CHIP			
R6164	1-216-864-11	SHORT CHIP			
R6165	1-216-864-11	SHORT CHIP			
R6166	1-216-864-11	SHORT CHIP			
R6170	1-216-833-11	METAL CHIP	10K	5%	1/10W
R6176	1-216-797-11	METAL CHIP	10	5%	1/10W
R6177	1-216-845-11	METAL CHIP	100K	5%	1/10W
R6178	1-216-845-11	METAL CHIP	100K	5%	1/10W
R6179	1-216-821-11	METAL CHIP	1K	5%	1/10W
R6180	1-218-867-11	METAL CHIP	6.8K	0.50%	1/10W
R6181	1-216-864-11	SHORT CHIP			
R6185	1-216-833-11	METAL CHIP	10K	5%	1/10W
R6188	1-216-864-11	SHORT CHIP			
R6189	1-216-864-11	SHORT CHIP			
R6191	1-216-864-11	SHORT CHIP			
R6192	1-216-864-11	SHORT CHIP			
R6193	1-216-864-11	SHORT CHIP			
R6195	1-216-864-11	SHORT CHIP			
R6201	1-216-833-11	METAL CHIP	10K	5%	1/10W
R6208	1-216-864-11	SHORT CHIP			
R6213	1-216-864-11	SHORT CHIP			
R6214	1-216-864-11	SHORT CHIP			
R6215	1-216-864-11	SHORT CHIP			
R6216	1-216-864-11	SHORT CHIP			

REF. NO.	PART NO.	DESCRIPTION	VALUES		
R6217	1-216-864-11	SHORT CHIP			
R6218	1-216-864-11	SHORT CHIP			
R6219	1-216-864-11	SHORT CHIP			
R6220	1-216-864-11	SHORT CHIP			
R6864	1-216-864-11	SHORT CHIP			
R6865	1-216-833-11	METAL CHIP	10K	5%	1/10W
R6866	1-216-864-11	SHORT CHIP			
R6867	1-216-833-11	METAL CHIP	10K	5%	1/10W
R6868	1-216-845-11	METAL CHIP	100K	5%	1/10W
R6869	1-216-845-11	METAL CHIP	100K	5%	1/10W
R6870	1-216-845-11	METAL CHIP	100K	5%	1/10W
R6873	1-216-809-11	METAL CHIP	100	5%	1/10W
R6874	1-216-845-11	METAL CHIP	100K	5%	1/10W
R6876	1-216-864-11	SHORT CHIP			
R6877	1-216-864-11	SHORT CHIP			
R6878	1-216-837-11	METAL CHIP	22K	5%	1/10W
R6880	1-216-833-11	METAL CHIP	10K	5%	1/10W
R6881	1-216-833-11	METAL CHIP	10K	5%	1/10W
R6882	1-216-809-11	METAL CHIP	100	5%	1/10W
R6883	1-216-864-11	SHORT CHIP			
R6884	1-216-864-11	SHORT CHIP			
R6885	1-216-864-11	SHORT CHIP			
R6886	1-216-864-11	SHORT CHIP			
R6887	1-216-864-11	SHORT CHIP			
R6888	1-216-864-11	SHORT CHIP			
R6889	1-216-809-11	METAL CHIP	100	5%	1/10W
R6890	1-216-809-11	METAL CHIP	100	5%	1/10W
R6891	1-216-809-11	METAL CHIP	100	5%	1/10W
R6892	1-216-809-11	METAL CHIP	100	5%	1/10W
R6893	1-216-833-11	METAL CHIP	10K	5%	1/10W
R6894	1-216-809-11	METAL CHIP	100	5%	1/10W
R6895	1-216-809-11	METAL CHIP	100	5%	1/10W
R6896	1-216-823-11	METAL CHIP	1.5K	5%	1/10W
R6897	1-216-864-11	SHORT CHIP			
R6898	1-218-654-11	METAL CHIP	27	0.50%	1/10W
R6899	1-218-654-11	METAL CHIP	27	0.50%	1/10W
R6901	1-216-805-11	METAL CHIP	47	5%	1/10W
R6902	1-216-864-11	SHORT CHIP			
R6904	1-216-864-11	SHORT CHIP			
R6906	1-216-833-11	METAL CHIP	10K	5%	1/10W
R6907	1-216-833-11	METAL CHIP	10K	5%	1/10W
R6908	1-216-825-11	METAL CHIP	2.2K	5%	1/10W
R6909	1-216-825-11	METAL CHIP	2.2K	5%	1/10W
R6910	1-216-809-11	METAL CHIP	100	5%	1/10W
R6911	1-216-809-11	METAL CHIP	100	5%	1/10W
R6912	1-216-809-11	METAL CHIP	100	5%	1/10W
R6913	1-216-864-11	SHORT CHIP			
R6914	1-216-801-11	METAL CHIP	22	5%	1/10W

G2

REF. NO.	PART NO.	DESCRIPTION	VALUES		
R6915	1-216-801-11	METAL CHIP	22	5%	1/10W
R6918	1-216-833-11	METAL CHIP	10K	5%	1/10W
R6919	1-216-833-11	METAL CHIP	10K	5%	1/10W
R6920	1-216-833-11	METAL CHIP	10K	5%	1/10W
R6921	1-216-833-11	METAL CHIP	10K	5%	1/10W
R6922	1-216-833-11	METAL CHIP	10K	5%	1/10W
R6924	1-216-833-11	METAL CHIP	10K	5%	1/10W
R6925	1-216-864-11	SHORT CHIP			
R6926	1-216-833-11	METAL CHIP	10K	5%	1/10W
R6927	1-216-833-11	METAL CHIP	10K	5%	1/10W
R6928	1-216-833-11	METAL CHIP	10K	5%	1/10W
R6929	1-216-809-11	METAL CHIP	100	5%	1/10W
R6930	1-216-857-11	METAL CHIP	1M	5%	1/10W
R6931	1-216-841-11	METAL CHIP	47K	5%	1/10W
R6932	1-216-833-11	METAL CHIP	10K	5%	1/10W
R6933	1-216-809-11	METAL CHIP	100	5%	1/10W
R6934	1-216-809-11	METAL CHIP	100	5%	1/10W
R6935	1-216-845-11	METAL CHIP	100K	5%	1/10W
R6936	1-216-841-11	METAL CHIP	47K	5%	1/10W
R6937	1-216-833-11	METAL CHIP	10K	5%	1/10W
R6938	1-216-833-11	METAL CHIP	10K	5%	1/10W
R6939	1-216-809-11	METAL CHIP	100	5%	1/10W
R6940	1-216-841-11	METAL CHIP	47K	5%	1/10W
R6941	1-216-845-11	METAL CHIP	100K	5%	1/10W
R6942	1-216-839-11	METAL CHIP	33K	5%	1/10W
R6943	1-216-833-11	METAL CHIP	10K	5%	1/10W
R6944	1-216-833-11	METAL CHIP	10K	5%	1/10W
R6945	1-216-833-11	METAL CHIP	10K	5%	1/10W
R6946	1-216-809-11	METAL CHIP	100	5%	1/10W
R6947	1-216-833-11	METAL CHIP	10K	5%	1/10W
R6948	1-216-837-11	METAL CHIP	22K	5%	1/10W
R6949	1-216-821-11	METAL CHIP	1K	5%	1/10W
R6950	1-216-833-11	METAL CHIP	10K	5%	1/10W
R6951	1-216-821-11	METAL CHIP	1K	5%	1/10W
R6952	1-216-833-11	METAL CHIP	10K	5%	1/10W
R6953	1-216-837-11	METAL CHIP	22K	5%	1/10W
R6954	1-216-821-11	METAL CHIP	1K	5%	1/10W
R6955	1-216-821-11	METAL CHIP	1K	5%	1/10W
R6956	1-216-833-11	METAL CHIP	10K	5%	1/10W
R6957	1-216-825-11	METAL CHIP	2.2K	5%	1/10W
R6958	1-216-864-11	SHORT CHIP			
R6959	1-216-833-11	METAL CHIP	10K	5%	1/10W
R6960	1-216-821-11	METAL CHIP	1K	5%	1/10W
R6961	1-216-833-11	METAL CHIP	10K	5%	1/10W
R6962	1-216-814-11	METAL CHIP	270	5%	1/10W
R6963	1-216-809-11	METAL CHIP	100	5%	1/10W
R6964	1-216-833-11	METAL CHIP	10K	5%	1/10W
R6966	1-216-801-11	METAL CHIP	22	5%	1/10W

REF. NO.	PART NO.	DESCRIPTION	VALUES		
R6967	1-216-801-11	METAL CHIP	22	5%	1/10W
R6968	1-216-813-11	METAL CHIP	220	5%	1/10W
R6970	1-216-809-11	METAL CHIP	100	5%	1/10W
R6971	1-216-833-11	METAL CHIP	10K	5%	1/10W
R6972	1-216-833-11	METAL CHIP	10K	5%	1/10W
R6973	1-216-833-11	METAL CHIP	10K	5%	1/10W
R6974	1-216-864-11	SHORT CHIP			
R6976	1-216-801-11	METAL CHIP	22	5%	1/10W
R6977	1-216-801-11	METAL CHIP	22	5%	1/10W
R6978	1-216-845-11	METAL CHIP	100K	5%	1/10W
R6979	1-216-864-11	SHORT CHIP			
R6980	1-216-809-11	METAL CHIP	100	5%	1/10W
R6981	1-216-809-11	METAL CHIP	100	5%	1/10W
R6982	1-216-841-11	METAL CHIP	47K	5%	1/10W
R6983	1-216-809-11	METAL CHIP	100	5%	1/10W
R6984	1-216-833-11	METAL CHIP	10K	5%	1/10W
R6985	1-216-833-11	METAL CHIP	10K	5%	1/10W
R6986	1-216-833-11	METAL CHIP	10K	5%	1/10W
R6987	1-216-809-11	METAL CHIP	100	5%	1/10W
R6988	1-216-833-11	METAL CHIP	10K	5%	1/10W
R6989	1-216-833-11	METAL CHIP	10K	5%	1/10W
R6990	1-216-864-11	SHORT CHIP			
R6993	1-216-833-11	METAL CHIP	10K	5%	1/10W
R6995	1-216-864-11	SHORT CHIP			
R6996	1-216-833-11	METAL CHIP	10K	5%	1/10W
R6999	1-216-833-11	METAL CHIP	10K	5%	1/10W

RESISTOR BRIDGE

RB6901	1-236-908-11	NETWORK RESISTOR(CHIP)	10K
RB6902	1-236-908-11	NETWORK RESISTOR(CHIP)	10K

CRYSTAL

X6900	1-767-419-21	VIBRATOR, CRYSTAL

KD

KD

REF. NO.	PART NO.	DESCRIPTION	VALUES		
*	A-1060-187-A	KD BOARD, COMPLETE			
	CAPACITOR				
C4702	1-124-779-00	ELECT CHIP	10µF	20%	16V
C4704	1-164-156-11	CERAMIC CHIP	0.1µF		25V
C4705	1-107-826-11	CERAMIC CHIP	0.1µF	10%	16V
C4707	1-100-743-91	CERAMIC CHIP	2.2µF	20%	16V
C4708	1-162-967-11	CERAMIC CHIP	0.0033µF	10%	50V
C4709	1-164-156-11	CERAMIC CHIP	0.1µF		25V
C4710	1-164-156-11	CERAMIC CHIP	0.1µF		25V
C4711	1-107-826-11	CERAMIC CHIP	0.1µF	10%	16V
C4714	1-162-964-11	CERAMIC CHIP	0.001µF	10%	50V
C4715	1-126-395-11	ELECT CHIP	22µF	20%	16V
C4716	1-164-156-11	CERAMIC CHIP	0.1µF		25V
C4718	1-107-826-11	CERAMIC CHIP	0.1µF	10%	16V
C4719	1-107-826-11	CERAMIC CHIP	0.1µF	10%	16V
C4720	1-125-827-91	CERAMIC CHIP	1µF	10%	25V
C4721	1-162-964-11	CERAMIC CHIP	0.001µF	10%	50V
C4722	1-164-156-11	CERAMIC CHIP	0.1µF		25V
C4723	1-115-340-11	CERAMIC CHIP	0.22µF	10%	25V
C4724	1-124-779-00	ELECT CHIP	10µF	20%	16V
C4725	1-164-156-11	CERAMIC CHIP	0.1µF		25V
C4728	1-162-923-11	CERAMIC CHIP	47pF	5%	50V
C4729	1-107-826-11	CERAMIC CHIP	0.1µF	10%	16V
C4730	1-163-989-11	CERAMIC CHIP	0.033µF	10%	25V
C4732	1-100-566-91	CERAMIC CHIP	0.1µF	10%	25V
C4733	1-107-826-11	CERAMIC CHIP	0.1µF	10%	16V
C4735	1-126-193-11	ELECT CHIP	1µF	20%	50V
C4736	1-100-566-91	CERAMIC CHIP	0.1µF	10%	25V
C4738	1-115-340-11	CERAMIC CHIP	0.22µF	10%	25V
C4740	1-162-964-11	CERAMIC CHIP	0.001µF	10%	50V
C4741	1-131-704-11	FILM	1µF	5%	50V
C4742	1-100-566-91	CERAMIC CHIP	0.1µF	10%	25V
C4743	1-162-964-11	CERAMIC CHIP	0.001µF	10%	50V
C4745	1-100-566-91	CERAMIC CHIP	0.1µF	10%	25V
C4746	1-107-826-11	CERAMIC CHIP	0.1µF	10%	16V
C4747	1-162-967-11	CERAMIC CHIP	0.0033µF	10%	50V
C4748	1-131-704-11	FILM	1µF	5%	50V
C4749	1-107-826-11	CERAMIC CHIP	0.1µF	10%	16V
C4750	1-100-566-91	CERAMIC CHIP	0.1µF	10%	25V
C4751	1-100-566-91	CERAMIC CHIP	0.1µF	10%	25V
C4752	1-162-967-11	CERAMIC CHIP	0.0033µF	10%	50V
C4753	1-117-318-91	ELECT	2200µF	20%	25V
C4754	1-100-566-91	CERAMIC CHIP	0.1µF	10%	25V
C4755	1-162-923-11	CERAMIC CHIP	47pF	5%	50V
C4756	1-162-923-11	CERAMIC CHIP	47pF	5%	50V
C4757	1-162-923-11	CERAMIC CHIP	47pF	5%	50V
C4758	1-163-989-11	CERAMIC CHIP	0.033µF	10%	25V
C4759	1-162-970-11	CERAMIC CHIP	0.01µF	10%	25V
C4761	1-125-827-91	CERAMIC CHIP	1µF	10%	25V
C4762	1-162-915-11	CERAMIC CHIP	10pF	0.50pF	50V
C4763	1-162-915-11	CERAMIC CHIP	10pF	0.50pF	50V
C4764	1-127-573-11	CERAMIC CHIP	1µF	10%	16V
C4765	1-128-994-21	ELECT CHIP	47µF	20%	10V
C4766	1-128-994-21	ELECT CHIP	47µF	20%	10V
C4767	1-128-994-21	ELECT CHIP	47µF	20%	10V
C4768	1-100-743-91	CERAMIC CHIP	2.2µF	20%	16V
C4769	1-107-826-11	CERAMIC CHIP	0.1µF	10%	16V
C4770	1-100-743-91	CERAMIC CHIP	2.2µF	20%	16V
C4771	1-125-827-91	CERAMIC CHIP	1µF	10%	25V
C4772	1-128-994-21	ELECT CHIP	47µF	20%	10V
C4773	1-124-779-00	ELECT CHIP	10µF	20%	16V
C4774	1-107-826-11	CERAMIC CHIP	0.1µF	10%	16V
C4776	1-164-156-11	CERAMIC CHIP	0.1µF		25V
C4777	1-163-989-11	CERAMIC CHIP	0.033µF	10%	25V
C4778	1-100-566-91	CERAMIC CHIP	0.1µF	10%	25V
C4780	1-107-826-11	CERAMIC CHIP	0.1µF	10%	16V
C4781	1-100-566-91	CERAMIC CHIP	0.1µF	10%	25V
C4784	1-100-566-91	CERAMIC CHIP	0.1µF	10%	25V
C4785	1-131-704-11	FILM	1µF	5%	50V
C4786	1-162-964-11	CERAMIC CHIP	0.001µF	10%	50V
C4788	1-100-566-91	CERAMIC CHIP	0.1µF	10%	25V
C4789	1-131-704-11	FILM	1µF	5%	50V
C4790	1-164-156-11	CERAMIC CHIP	0.1µF		25V
C4791	1-164-156-11	CERAMIC CHIP	0.1µF		25V
C4792	1-162-964-11	CERAMIC CHIP	0.001µF	10%	50V
C4793	1-100-566-91	CERAMIC CHIP	0.1µF	10%	25V
C4795	1-117-318-91	ELECT	2200µF	20%	25V
C4796	1-107-826-11	CERAMIC CHIP	0.1µF	10%	16V
C4797	1-100-566-91	CERAMIC CHIP	0.1µF	10%	25V
C4799	1-100-566-91	CERAMIC CHIP	0.1µF	10%	25V
C4801	1-115-340-11	CERAMIC CHIP	0.22µF	10%	25V
C4802	1-126-395-11	ELECT CHIP	22µF	20%	16V
C4803	1-164-156-11	CERAMIC CHIP	0.1µF		25V
C4804	1-163-989-11	CERAMIC CHIP	0.033µF	10%	25V
C4805	1-107-826-11	CERAMIC CHIP	0.1µF	10%	16V
C4806	1-107-826-11	CERAMIC CHIP	0.1µF	10%	16V
C4807	1-164-156-11	CERAMIC CHIP	0.1µF		25V
C4808	1-124-779-00	ELECT CHIP	10µF	20%	16V
C4809	1-164-156-11	CERAMIC CHIP	0.1µF		25V
C4811	1-162-923-11	CERAMIC CHIP	47pF	5%	50V

KD

REF. NO.	PART NO.	DESCRIPTION	VALUES		
C4813	1-107-826-11	CERAMIC CHIP	0.1µF	10%	16V
C4814	1-125-827-91	CERAMIC CHIP	1µF	10%	25V
C4817	1-162-964-11	CERAMIC CHIP	0.001µF	10%	50V
C4818	1-107-826-11	CERAMIC CHIP	0.1µF	10%	16V
C4820	1-126-193-11	ELECT CHIP	1µF	20%	50V
C4821	1-126-193-11	ELECT CHIP	1µF	20%	50V
C4822	1-115-340-11	CERAMIC CHIP	0.22µF	10%	25V
C4823	1-162-964-11	CERAMIC CHIP	0.001µF	10%	50V
C4825	1-162-964-11	CERAMIC CHIP	0.001µF	10%	50V
C4827	1-107-826-11	CERAMIC CHIP	0.1µF	10%	16V
C4828	1-128-006-11	ELECT CHIP	4.7µF	20%	25V
C4829	1-107-826-11	CERAMIC CHIP	0.1µF	10%	16V
C4830	1-125-827-91	CERAMIC CHIP	1µF	10%	25V
C4831	1-162-964-11	CERAMIC CHIP	0.001µF	10%	50V
C4832	1-115-340-11	CERAMIC CHIP	0.22µF	10%	25V
C4833	1-162-923-11	CERAMIC CHIP	47pF	5%	50V
C4834	1-162-923-11	CERAMIC CHIP	47pF	5%	50V
C4835	1-162-923-11	CERAMIC CHIP	47pF	5%	50V
C4836	1-162-970-11	CERAMIC CHIP	0.01µF	10%	25V
C4837	1-162-923-11	CERAMIC CHIP	47pF	5%	50V
C4838	1-163-989-11	CERAMIC CHIP	0.033µF	10%	25V
C4839	1-100-566-91	CERAMIC CHIP	0.1µF	10%	25V
C4840	1-100-566-91	CERAMIC CHIP	0.1µF	10%	25V
C4842	1-115-340-11	CERAMIC CHIP	0.22µF	10%	25V
C4844	1-162-964-11	CERAMIC CHIP	0.001µF	10%	50V
C4845	1-131-704-11	FILM	1µF	5%	50V
C4846	1-100-566-91	CERAMIC CHIP	0.1µF	10%	25V
C4847	1-162-964-11	CERAMIC CHIP	0.001µF	10%	50V
C4848	1-100-566-91	CERAMIC CHIP	0.1µF	10%	25V
C4850	1-131-704-11	FILM	1µF	5%	50V
C4851	1-100-566-91	CERAMIC CHIP	0.1µF	10%	25V
C4852	1-100-566-91	CERAMIC CHIP	0.1µF	10%	25V
C4854	1-117-318-91	ELECT	2200µF	20%	25V
C4855	1-117-681-11	ELECT CHIP	100µF	20%	16V
C4856	1-117-681-11	ELECT CHIP	100µF	20%	16V
C4857	1-100-566-91	CERAMIC CHIP	0.1µF	10%	25V
C4858	1-100-566-91	CERAMIC CHIP	0.1µF	10%	25V
C4859	1-163-989-11	CERAMIC CHIP	0.033µF	10%	25V
C4861	1-162-970-11	CERAMIC CHIP	0.01µF	10%	25V
C4862	1-162-970-11	CERAMIC CHIP	0.01µF	10%	25V
C4864	1-125-827-91	CERAMIC CHIP	1µF	10%	25V
C4866	1-128-401-11	ELECT CHIP	100µF	20%	25V
C4867	1-162-964-11	CERAMIC CHIP	0.001µF	10%	50V
C4868	1-128-401-11	ELECT CHIP	100µF	20%	25V
C4870	1-107-826-11	CERAMIC CHIP	0.1µF	10%	16V
C4871	1-124-779-00	ELECT CHIP	10µF	20%	16V
C4874	1-126-193-11	ELECT CHIP	1µF	20%	50V
C4901	1-127-931-21	ELECT CHIP	470µF	20%	16V

	REF. NO.	PART NO.	DESCRIPTION	VALUES
		CONNECTOR		
*	CN4701	1-785-701-11	PIN, CONNECTOR (PC BOARD)	3P
*	CN4702	1-779-944-11	PIN, CONNECTOR (PC BOARD)	4P
*	CN4703	1-793-497-11	CONNECTOR, BOARD TO BOARD	40P
	CN4705	1-764-101-11	PIN, CONNECTOR (PC BOARD)	2P
		DIODE		
	D4701	8-719-404-50	DIODE	MA111-TX
	D4702	8-719-404-50	DIODE	MA111-TX
	D4709	8-719-404-50	DIODE	MA111-TX
	D4710	8-719-404-50	DIODE	MA111-TX
	D4717	8-719-404-50	DIODE	MA111-TX
	D4719	8-719-989-00	DIODE	DA221
	D4901	8-719-404-50	DIODE	MA111-TX
	D4902	8-719-421-15	DIODE	MA8027-L
		IC		
	IC4701	6-701-834-01	IC	PCM1802DBR
	IC4702	6-705-979-01	IC	CXD9788AR
	IC4703	6-704-802-01	IC	CXD9774M
	IC4704	8-759-832-05	IC	BA18BC0FP-E2
	IC4705	8-759-242-70	IC	TC7WU04F
	IC4706	6-701-834-01	IC	PCM1802DBR
	IC4707	6-705-979-01	IC	CXD9788AR
	IC4708	6-704-802-01	IC	CXD9774M
	IC4709	6-704-643-01	IC	R3112N221A-TR-FA
	IC4710	6-704-802-01	IC	CXD9774M
	IC4711	8-759-548-99	IC	SN74LV08APWR
	IC4712	8-759-460-81	IC	BA12FP-E2
		COIL		
	L4701	1-469-555-21	INDUCTOR	10µH
	L4702	1-456-813-11	COIL, AIR-CORE	
	L4703	1-456-864-11	INDUCTOR	11µH
	L4704	1-456-864-11	INDUCTOR	11µH
	L4705	1-456-813-11	COIL, AIR-CORE	
	L4706	1-469-555-21	INDUCTOR	10µH
	L4707	1-469-555-21	INDUCTOR	10µH
	L4708	1-456-813-11	COIL, AIR-CORE	
	L4709	1-456-864-11	INDUCTOR	11µH
	L4710	1-456-864-11	INDUCTOR	11µH
	L4711	1-456-813-11	COIL, AIR-CORE	
	L4712	1-456-813-11	COIL, AIR-CORE	
	L4713	1-456-864-11	INDUCTOR	11µH
	L4714	1-456-864-11	INDUCTOR	11µH

KD

	REF. NO.	PART NO.	DESCRIPTION	VALUES		
	L4715	1-414-487-41	INDUCTOR	1µH		
	L4716	1-456-813-11	COIL, AIR-CORE			
	L4717	1-469-555-21	INDUCTOR	10µH		
		WIRE PIN				
*	LP4701	4-042-408-02	PIN(45), WIRE			
*	LP4702	4-042-408-02	PIN(45), WIRE			
		TRANSISTOR				
	Q4701	6-550-586-01	TRANSISTOR	2PA1576R-115		
	Q4702	6-550-586-01	TRANSISTOR	2PA1576R-115		
	Q4703	6-550-585-01	TRANSISTOR	2PC4081R-115		
	Q4704	6-550-586-01	TRANSISTOR	2PA1576R-115		
	Q4705	6-550-586-01	TRANSISTOR	2PA1576R-115		
	Q4706	6-550-586-01	TRANSISTOR	2PA1576R-115		
	Q4707	6-550-586-01	TRANSISTOR	2PA1576R-115		
	Q4708	6-550-585-01	TRANSISTOR	2PC4081R-115		
	Q4709	6-550-586-01	TRANSISTOR	2PA1576R-115		
	Q4711	6-550-585-01	TRANSISTOR	2PC4081R-115		
	Q4901	6-550-586-01	TRANSISTOR	2PA1576R-115		
	Q4902	6-550-585-01	TRANSISTOR	2PC4081R-115		
		RESISTOR				
	R4701	1-216-809-11	METAL CHIP	100	5%	1/10W
	R4702	1-216-809-11	METAL CHIP	100	5%	1/10W
	R4703	1-216-809-11	METAL CHIP	100	5%	1/10W
	R4704	1-216-809-11	METAL CHIP	100	5%	1/10W
	R4705	1-216-845-11	METAL CHIP	100K	5%	1/10W
	R4708	1-216-846-11	METAL CHIP	120K	5%	1/10W
	R4709	1-216-845-11	METAL CHIP	100K	5%	1/10W
	R4710	1-216-821-11	METAL CHIP	1K	5%	1/10W
	R4711	1-216-864-11	SHORT CHIP			
	R4715	1-216-864-11	SHORT CHIP			
	R4716	1-216-790-11	METAL CHIP	2.7	5%	1/10W
	R4717	1-216-809-11	METAL CHIP	100	5%	1/10W
	R4719	1-216-818-11	METAL CHIP	560	5%	1/10W
	R4720	1-216-837-11	METAL CHIP	22K	5%	1/10W
	R4721	1-220-281-11	RES-CHIP	4.7K	5%	1/4W
	R4722	1-220-281-11	RES-CHIP	4.7K	5%	1/4W
	R4723	1-216-833-11	METAL CHIP	10K	5%	1/10W
	R4724	1-216-864-11	SHORT CHIP			
	R4725	1-216-821-11	METAL CHIP	1K	5%	1/10W
	R4726	1-216-833-11	METAL CHIP	10K	5%	1/10W
	R4727	1-216-864-11	SHORT CHIP			
	R4728	1-216-864-11	SHORT CHIP			
	R4729	1-216-790-11	METAL CHIP	2.7	5%	1/10W
	R4731	1-216-864-11	SHORT CHIP			
	R4732	1-220-942-11	METAL CHIP	3.3	1%	1/4W

REF. NO.	PART NO.	DESCRIPTION	VALUES		
R4733	1-216-864-11	SHORT CHIP			
R4734	1-218-708-11	METAL CHIP	4.7K	0.50%	1/10W
R4735	1-216-821-11	METAL CHIP	1K	5%	1/10W
R4736	1-220-942-11	METAL CHIP	3.3	1%	1/4W
R4737	1-218-708-11	METAL CHIP	4.7K	0.50%	1/10W
R4738	1-216-809-11	METAL CHIP	100	5%	1/10W
R4739	1-216-809-11	METAL CHIP	100	5%	1/10W
R4740	1-216-809-11	METAL CHIP	100	5%	1/10W
R4741	1-216-833-11	METAL CHIP	10K	5%	1/10W
R4742	1-216-864-11	SHORT CHIP			
R4743	1-216-809-11	METAL CHIP	100	5%	1/10W
R4744	1-216-864-11	SHORT CHIP			
R4747	1-216-864-11	SHORT CHIP			
R4750	1-216-864-11	SHORT CHIP			
R4751	1-216-833-11	METAL CHIP	10K	5%	1/10W
R4752	1-216-817-11	METAL CHIP	470	5%	1/10W
R4753	1-216-847-11	METAL CHIP	150K	5%	1/10W
R4754	1-216-857-11	METAL CHIP	1M	5%	1/10W
R4755	1-216-844-11	METAL CHIP	82K	5%	1/10W
R4756	1-216-845-11	METAL CHIP	100K	5%	1/10W
R4757	1-216-846-11	METAL CHIP	120K	5%	1/10W
R4758	1-216-845-11	METAL CHIP	100K	5%	1/10W
R4759	1-216-845-11	METAL CHIP	100K	5%	1/10W
R4760	1-216-846-11	METAL CHIP	120K	5%	1/10W
R4761	1-216-845-11	METAL CHIP	100K	5%	1/10W
R4762	1-220-281-11	RES-CHIP	4.7K	5%	1/4W
R4763	1-216-809-11	METAL CHIP	100	5%	1/10W
R4764	1-216-809-11	METAL CHIP	100	5%	1/10W
R4765	1-216-864-11	SHORT CHIP			
R4767	1-216-809-11	METAL CHIP	100	5%	1/10W
R4768	1-216-864-11	SHORT CHIP			
R4770	1-216-813-11	METAL CHIP	220	5%	1/10W
R4771	1-216-821-11	METAL CHIP	1K	5%	1/10W
R4772	1-216-809-11	METAL CHIP	100	5%	1/10W
R4774	1-216-864-11	SHORT CHIP			
R4775	1-216-864-11	SHORT CHIP			
R4776	1-216-864-11	SHORT CHIP			
R4778	1-216-864-11	SHORT CHIP			
R4779	1-220-942-11	METAL CHIP	3.3	1%	1/4W
R4780	1-216-864-11	SHORT CHIP			
R4781	1-218-708-11	METAL CHIP	4.7K	0.50%	1/10W
R4782	1-220-942-11	METAL CHIP	3.3	1%	1/4W
R4783	1-218-708-11	METAL CHIP	4.7K	0.50%	1/10W
R4784	1-216-864-11	SHORT CHIP			
R4785	1-216-821-11	METAL CHIP	1K	5%	1/10W
R4786	1-216-864-11	SHORT CHIP			
R4787	1-216-790-11	METAL CHIP	2.7	5%	1/10W
R4788	1-216-864-11	SHORT CHIP			

KD P

REF. NO.	PART NO.	DESCRIPTION	VALUES		
R4789	1-216-864-11	SHORT CHIP			
R4791	1-216-864-11	SHORT CHIP			
R4792	1-216-818-11	METAL CHIP	560	5%	1/10W
R4793	1-216-822-11	METAL CHIP	1.2K	5%	1/10W
R4794	1-216-837-11	METAL CHIP	22K	5%	1/10W
R4796	1-216-809-11	METAL CHIP	100	5%	1/10W
R4797	1-216-833-11	METAL CHIP	10K	5%	1/10W
R4798	1-216-864-11	SHORT CHIP			
R4799	1-216-833-11	METAL CHIP	10K	5%	1/10W
R4800	1-216-864-11	SHORT CHIP			
R4801	1-216-790-11	METAL CHIP	2.7	5%	1/10W
R4802	1-216-864-11	SHORT CHIP			
R4804	1-216-821-11	METAL CHIP	1K	5%	1/10W
R4805	1-216-809-11	METAL CHIP	100	5%	1/10W
R4806	1-216-809-11	METAL CHIP	100	5%	1/10W
R4807	1-216-809-11	METAL CHIP	100	5%	1/10W
R4808	1-216-833-11	METAL CHIP	10K	5%	1/10W
R4809	1-216-864-11	SHORT CHIP			
R4811	1-216-790-11	METAL CHIP	2.7	5%	1/10W
R4813	1-216-821-11	METAL CHIP	1K	5%	1/10W
R4814	1-216-818-11	METAL CHIP	560	5%	1/10W
R4815	1-216-837-11	METAL CHIP	22K	5%	1/10W
R4816	1-216-833-11	METAL CHIP	10K	5%	1/10W
R4819	1-216-829-11	METAL CHIP	4.7K	5%	1/10W
R4820	1-216-829-11	METAL CHIP	4.7K	5%	1/10W
R4822	1-216-833-11	METAL CHIP	10K	5%	1/10W
R4823	1-216-864-11	SHORT CHIP			
R4824	1-216-790-11	METAL CHIP	2.7	5%	1/10W
R4826	1-216-864-11	SHORT CHIP			
R4827	1-220-942-11	METAL CHIP	3.3	1%	1/4W
R4828	1-216-864-11	SHORT CHIP			
R4829	1-218-708-11	METAL CHIP	4.7K	0.50%	1/10W
R4830	1-216-833-11	METAL CHIP	10K	5%	1/10W
R4831	1-216-833-11	METAL CHIP	10K	5%	1/10W
R4832	1-220-942-11	METAL CHIP	3.3	1%	1/4W
R4833	1-218-708-11	METAL CHIP	4.7K	0.50%	1/10W
R4834	1-216-864-11	SHORT CHIP			
R4835	1-216-864-11	SHORT CHIP			
R4837	1-216-864-11	SHORT CHIP			
R4841	1-215-872-11	METAL OXIDE	3.3K	5%	1W
R4842	1-216-822-11	METAL CHIP	1.2K	5%	1/10W
R4843	1-216-797-11	METAL CHIP	10	5%	1/10W
R4845	1-216-821-11	METAL CHIP	1K	5%	1/10W
R4846	1-216-822-11	METAL CHIP	1.2K	5%	1/10W
R4848	1-216-821-11	METAL CHIP	1K	5%	1/10W
R4850	1-216-809-11	METAL CHIP	100	5%	1/10W
R4851	1-216-809-11	METAL CHIP	100	5%	1/10W
R4852	1-216-809-11	METAL CHIP	100	5%	1/10W
R4853	1-216-809-11	METAL CHIP	100	5%	1/10W
R4854	1-216-864-11	SHORT CHIP			
R4858	1-216-833-11	METAL CHIP	10K	5%	1/10W
R4860	1-216-864-11	SHORT CHIP			
R4861	1-216-864-11	SHORT CHIP			
R4862	1-249-393-11	CARBON	10	5%	1/4W
R4863	1-216-864-11	SHORT CHIP			
R4864	1-216-864-11	SHORT CHIP			
R4865	1-216-864-11	SHORT CHIP			
R4866	1-216-864-11	SHORT CHIP			
R4867	1-216-864-11	SHORT CHIP			
R4868	1-216-864-11	SHORT CHIP			
R4869	1-216-833-11	METAL CHIP	10K	5%	1/10W
R4870	1-216-864-11	SHORT CHIP			
R4871	1-216-864-11	SHORT CHIP			
R4872	1-216-864-11	SHORT CHIP			
R4875	1-216-864-11	SHORT CHIP			
R4886	1-216-864-11	SHORT CHIP			
R4887	1-216-833-11	METAL CHIP	10K	5%	1/10W
R4889	1-216-821-11	METAL CHIP	1K	5%	1/10W
R4933	1-216-821-11	METAL CHIP	1K	5%	1/10W
R4935	1-216-835-11	METAL CHIP	15K	5%	1/10W
R4936	1-216-821-11	METAL CHIP	1K	5%	1/10W
R4937	1-216-833-11	METAL CHIP	10K	5%	1/10W
R4938	1-216-821-11	METAL CHIP	1K	5%	1/10W

CRYSTAL

X4702	1-795-843-11	VIBRATOR, CRYSTAL
X4703	1-813-388-11	OSCILLATOR, CRYSTAL

P

*	**A-1068-754-A**	**P BOARD, COMPLETE**
	4-382-854-01	SCREW (M3X8), P, SW (+)
	7-685-872-09	SCREW +BVTT (3X8) (S)

CAPACITOR

C9507	1-162-970-11	CERAMIC CHIP	0.01µF	10%	25V
C9508	1-126-394-11	ELECT CHIP	10µF	20%	16V
C9509	1-162-966-11	CERAMIC CHIP	0.0022µF	10%	50V
C9510	1-164-230-11	CERAMIC CHIP	220pF	5%	50V
C9511	1-162-966-11	CERAMIC CHIP	0.0022µF	10%	50V
C9513	1-162-966-11	CERAMIC CHIP	0.0022µF	10%	50V
C9514	1-126-394-11	ELECT CHIP	10µF	20%	16V
C9515	1-126-394-11	ELECT CHIP	10µF	20%	16V
C9516	1-107-826-11	CERAMIC CHIP	0.1µF	10%	16V
C9517	1-126-394-11	ELECT CHIP	10µF	20%	16V

P

REF. NO.	PART NO.	DESCRIPTION	VALUES		
C9519	1-100-566-91	CERAMIC CHIP	0.1µF	10%	25V
C9521	1-162-964-11	CERAMIC CHIP	0.001µF	10%	50V
C9523	1-162-964-11	CERAMIC CHIP	0.001µF	10%	50V
C9524	1-100-566-91	CERAMIC CHIP	0.1µF	10%	25V
C9525	1-100-566-91	CERAMIC CHIP	0.1µF	10%	25V
C9526	1-126-394-11	ELECT CHIP	10µF	20%	16V
C9527	1-164-505-11	CERAMIC CHIP	2.2µF		16V
C9528	1-126-246-11	ELECT CHIP	220µF	20%	4V
C9529	1-107-826-11	CERAMIC CHIP	0.1µF	10%	16V
C9530	1-126-394-11	ELECT CHIP	10µF	20%	16V
C9531	1-126-394-11	ELECT CHIP	10µF	20%	16V
C9532	1-126-394-11	ELECT CHIP	10µF	20%	16V
C9533	1-100-566-91	CERAMIC CHIP	0.1µF	10%	25V
C9534	1-100-566-91	CERAMIC CHIP	0.1µF	10%	25V
C9535	1-100-566-91	CERAMIC CHIP	0.1µF	10%	25V
C9537	1-107-826-11	CERAMIC CHIP	0.1µF	10%	16V
C9538	1-162-964-11	CERAMIC CHIP	0.001µF	10%	50V
C9540	1-100-566-91	CERAMIC CHIP	0.1µF	10%	25V
C9541	1-107-826-11	CERAMIC CHIP	0.1µF	10%	16V
C9542	1-126-394-11	ELECT CHIP	10µF	20%	16V
C9543	1-162-966-11	CERAMIC CHIP	0.0022µF	10%	50V
C9545	1-162-966-11	CERAMIC CHIP	0.0022µF	10%	50V
C9546	1-164-230-11	CERAMIC CHIP	220pF	5%	50V
C9547	1-107-826-11	CERAMIC CHIP	0.1µF	10%	16V
C9549	1-100-566-91	CERAMIC CHIP	0.1µF	10%	25V
C9550	1-100-566-91	CERAMIC CHIP	0.1µF	10%	25V
C9551	1-100-566-91	CERAMIC CHIP	0.1µF	10%	25V
C9552	1-126-246-11	ELECT CHIP	220µF	20%	4V
C9553	1-162-966-11	CERAMIC CHIP	0.0022µF	10%	50V
C9554	1-126-394-11	ELECT CHIP	10µF	20%	16V
C9555	1-126-394-11	ELECT CHIP	10µF	20%	16V
C9557	1-100-566-91	CERAMIC CHIP	0.1µF	10%	25V
C9558	1-107-826-11	CERAMIC CHIP	0.1µF	10%	16V
C9559	1-126-394-11	ELECT CHIP	10µF	20%	16V
C9560	1-126-246-11	ELECT CHIP	220µF	20%	4V
C9561	1-100-756-91	CERAMIC CHIP	0.047µF	50V	
C9562	1-127-692-11	CERAMIC CHIP	10µF	10%	16V
C9563	1-126-394-11	ELECT CHIP	10µF	20%	16V
C9571	1-126-394-11	ELECT CHIP	10µF	20%	16V
C9575	1-162-970-11	CERAMIC CHIP	0.01µF	10%	25V
C9576	1-126-394-11	ELECT CHIP	10µF	20%	16V
C9578	1-162-916-11	CERAMIC CHIP	12pF	5%	50V
C9579	1-162-916-11	CERAMIC CHIP	12pF	5%	50V
C9583	1-107-826-11	CERAMIC CHIP	0.1µF	10%	16V
C9584	1-100-566-91	CERAMIC CHIP	0.1µF	10%	25V
C9585	1-100-566-91	CERAMIC CHIP	0.1µF	10%	25V
C9586	1-100-566-91	CERAMIC CHIP	0.1µF	10%	25V
C9587	1-100-566-91	CERAMIC CHIP	0.1µF	10%	25V

REF. NO.	PART NO.	DESCRIPTION	VALUES		
C9588	1-100-566-91	CERAMIC CHIP	0.1µF	10%	25V
C9589	1-100-566-91	CERAMIC CHIP	0.1µF	10%	25V
C9623	1-100-566-91	CERAMIC CHIP	0.1µF	10%	25V
C9824	1-162-919-11	CERAMIC CHIP	22pF	5%	50V
C9825	1-162-919-11	CERAMIC CHIP	22pF	5%	50V
C9826	1-162-919-11	CERAMIC CHIP	22pF	5%	50V
C9828	1-126-394-11	ELECT CHIP	10µF	20%	16V
C9830	1-100-566-91	CERAMIC CHIP	0.1µF	10%	25V
C9831	1-126-394-11	ELECT CHIP	10µF	20%	16V
C9832	1-107-826-11	CERAMIC CHIP	0.1µF	10%	16V
C9833	1-100-566-91	CERAMIC CHIP	0.1µF	10%	25V
C9835	1-100-588-21	ELECT CHIP	1000µF	20%	6.3V
C9836	1-126-394-11	ELECT CHIP	10µF	20%	16V
C9839	1-126-394-11	ELECT CHIP	10µF	20%	16V
C9841	1-100-118-21	ELECT CHIP	82µF	20%	16V
C9842	1-137-897-21	ELECT CHIP	150µF	20%	4V
C9843	1-107-826-11	CERAMIC CHIP	0.1µF	10%	16V

CONNECTOR

*	CN9500	1-818-400-11	HDMI CONNECTOR	
	CN9504	1-564-593-11	PLUG, CONNECTOR	14P

DIODE

	D9500	8-719-210-39	DIODE	EC10QS-04
	D9501	6-500-294-01	DIODE	PTZ-TE25-3.9B
	D9502	8-719-977-28	DIODE	DTZ10B
	D9503	8-719-977-28	DIODE	DTZ10B
	D9506	8-719-404-50	DIODE	MA111-TX
	D9507	8-719-404-50	DIODE	MA111-TX

FERRITE BEAD

	FB9504	1-414-235-22	FERRITE	0µH
	FB9505	1-414-235-22	FERRITE	0µH
	FB9506	1-414-235-22	FERRITE	0µH
	FB9507	1-414-235-22	FERRITE	0µH
	FB9508	1-414-235-22	FERRITE	0µH
	FB9509	1-414-235-22	FERRITE	0µH
	FB9510	1-414-235-22	FERRITE	0µH
	FB9512	1-414-235-22	FERRITE	0µH

FILTER

*	FL9501	1-813-308-11	INDUCTOR	0µH
*	FL9504	1-813-308-11	INDUCTOR	0µH
*	FL9505	1-813-308-11	INDUCTOR	0µH
*	FL9506	1-813-308-11	INDUCTOR	0µH

P

REF. NO.	PART NO.	DESCRIPTION	VALUES		
	IC				
IC9500	6-706-257-01	IC	FMS6418AM16X		
IC9502	6-704-819-01	IC	CS4335-KSZR		
IC9503	6-704-407-01	IC	PQ1CZ41H2ZPH		
IC9504	6-704-001-01	IC	BR24L02F-WE2		
IC9505	6-704-499-01	IC	SII9993CTG100		
IC9506	6-703-042-01	IC	CD4052BNSR		
IC9509	6-550-014-01	TRANSISTOR	SSM6N15FU(TE85R)		
IC9514	8-759-331-71	IC	NJM4558E(TE2)		
IC9517	6-804-248-01	IC	HD64F3694FXV-DA4		
IC9521	8-759-642-22	IC	UPC29M05T-E2		
	JACK				
J9503	1-794-623-11	JACK, PIN	2P		
	COIL				
L9501	1-416-948-21	INDUCTOR	10µH		
L9502	1-400-303-21	INDUCTOR	68µH		
	IC LINK				
PS9500	1-576-415-21	FUSE	2A	32V	
	TRANSISTOR				
Q9501	8-729-024-88	TRANSISTOR	MUN2212T1		
Q9502	8-729-421-22	TRANSISTOR	UN2211		
Q9503	8-729-027-62	TRANSISTOR	DTC144WKA-T146		
Q9506	8-729-024-88	TRANSISTOR	MUN2212T1		
Q9511	8-729-421-22	TRANSISTOR	UN2211		
Q9514	8-729-027-62	TRANSISTOR	DTC144WKA-T146		
Q9516	8-729-421-22	TRANSISTOR	UN2211		
Q9517	8-729-421-22	TRANSISTOR	UN2211		
	RESISTOR				
R9501	1-218-665-11	METAL CHIP	75	0.50%	1/10W
R9502	1-218-665-11	METAL CHIP	75	0.50%	1/10W
R9505	1-216-841-11	METAL CHIP	47K	5%	1/10W
R9507	1-216-857-11	METAL CHIP	1M	5%	1/10W
R9508	1-216-857-11	METAL CHIP	1M	5%	1/10W
R9509	1-216-857-11	METAL CHIP	1M	5%	1/10W
R9510	1-218-665-11	METAL CHIP	75	0.50%	1/10W
R9511	1-216-803-11	METAL CHIP	33	5%	1/10W
R9512	1-218-665-11	METAL CHIP	75	0.50%	1/10W
R9513	1-218-665-11	METAL CHIP	75	0.50%	1/10W
R9514	1-218-665-11	METAL CHIP	75	0.50%	1/10W
R9515	1-218-665-11	METAL CHIP	75	0.50%	1/10W
R9516	1-218-665-11	METAL CHIP	75	0.50%	1/10W
R9517	1-218-665-11	METAL CHIP	75	0.50%	1/10W
R9518	1-216-857-11	METAL CHIP	1M	5%	1/10W
R9519	1-216-803-11	METAL CHIP	33	5%	1/10W
R9520	1-216-816-11	METAL CHIP	390	5%	1/10W
R9526	1-218-716-11	METAL CHIP	10K	0.50%	1/10W
R9528	1-216-837-11	METAL CHIP	22K	5%	1/10W
R9529	1-216-850-11	METAL CHIP	270K	5%	1/10W
R9530	1-216-821-11	METAL CHIP	1K	5%	1/10W
R9531	1-216-829-11	METAL CHIP	4.7K	5%	1/10W
R9532	1-218-694-11	METAL CHIP	1.2K	0.50%	1/10W
R9533	1-216-825-11	METAL CHIP	2.2K	5%	1/10W
R9534	1-218-686-11	METAL CHIP	560	0.50%	1/10W
R9535	1-216-845-11	METAL CHIP	100K	5%	1/10W
R9538	1-218-823-11	METAL CHIP	100	0.50%	1/10W
R9539	1-216-821-11	METAL CHIP	1K	5%	1/10W
R9540	1-216-829-11	METAL CHIP	4.7K	5%	1/10W
R9541	1-218-694-11	METAL CHIP	1.2K	0.50%	1/10W
R9542	1-216-850-11	METAL CHIP	270K	5%	1/10W
R9543	1-218-686-11	METAL CHIP	560	0.50%	1/10W
R9544	1-218-706-11	METAL CHIP	3.9K	0.50%	1/10W
R9546	1-218-706-11	METAL CHIP	3.9K	0.50%	1/10W
R9547	1-216-845-11	METAL CHIP	100K	5%	1/10W
R9548	1-218-716-11	METAL CHIP	10K	0.50%	1/10W
R9552	1-216-817-11	METAL CHIP	470	5%	1/10W
R9555	1-218-706-11	METAL CHIP	3.9K	0.50%	1/10W
R9556	1-216-829-11	METAL CHIP	4.7K	5%	1/10W
R9557	1-218-706-11	METAL CHIP	3.9K	0.50%	1/10W
R9558	1-216-829-11	METAL CHIP	4.7K	5%	1/10W
R9559	1-216-809-11	METAL CHIP	100	5%	1/10W
R9560	1-216-864-11	SHORT CHIP			
R9562	1-216-809-11	METAL CHIP	100	5%	1/10W
R9563	1-218-706-11	METAL CHIP	3.9K	0.50%	1/10W
R9564	1-216-837-11	METAL CHIP	22K	5%	1/10W
R9565	1-216-845-11	METAL CHIP	100K	5%	1/10W
R9566	1-216-864-11	SHORT CHIP			
R9569	1-216-845-11	METAL CHIP	100K	5%	1/10W
R9572	1-216-837-11	METAL CHIP	22K	5%	1/10W
R9574	1-216-809-11	METAL CHIP	100	5%	1/10W
R9575	1-216-809-11	METAL CHIP	100	5%	1/10W
R9576	1-216-857-11	METAL CHIP	1M	5%	1/10W
R9577	1-216-857-11	METAL CHIP	1M	5%	1/10W
R9580	1-216-809-11	METAL CHIP	100	5%	1/10W
R9581	1-216-809-11	METAL CHIP	100	5%	1/10W
R9582	1-216-833-11	METAL CHIP	10K	5%	1/10W
R9584	1-216-833-11	METAL CHIP	10K	5%	1/10W

P B

REF. NO.	PART NO.	DESCRIPTION	VALUES		
R9585	1-216-809-11	METAL CHIP	100	5%	1/10W
R9586	1-216-809-11	METAL CHIP	100	5%	1/10W
R9592	1-216-809-11	METAL CHIP	100	5%	1/10W
R9595	1-216-817-11	METAL CHIP	470	5%	1/10W
R9597	1-216-803-11	METAL CHIP	33	5%	1/10W
R9602	1-216-809-11	METAL CHIP	100	5%	1/10W
R9606	1-216-864-11	SHORT CHIP			
R9612	1-216-864-11	SHORT CHIP			
R9614	1-216-809-11	METAL CHIP	100	5%	1/10W
R9615	1-216-809-11	METAL CHIP	100	5%	1/10W
R9616	1-216-809-11	METAL CHIP	100	5%	1/10W
R9623	1-216-845-11	METAL CHIP	100K	5%	1/10W
R9624	1-216-845-11	METAL CHIP	100K	5%	1/10W
R9625	1-216-845-11	METAL CHIP	100K	5%	1/10W
R9626	1-216-833-11	METAL CHIP	10K	5%	1/10W
R9627	1-216-809-11	METAL CHIP	100	5%	1/10W
R9850	1-216-833-11	METAL CHIP	10K	5%	1/10W
R9851	1-216-821-11	METAL CHIP	1K	5%	1/10W
R9852	1-218-644-11	METAL CHIP	10	0.50%	1/10W
R9853	1-216-845-11	METAL CHIP	100K	5%	1/10W
R9854	1-216-845-11	METAL CHIP	100K	5%	1/10W
R9860	1-218-706-11	METAL CHIP	3.9K	0.50%	1/10W
R9864	1-218-701-11	METAL CHIP	2.4K	0.50%	1/10W
R9866	1-216-821-11	METAL CHIP	1K	5%	1/10W
R9867	1-216-821-11	METAL CHIP	1K	5%	1/10W
R9868	1-216-833-11	METAL CHIP	10K	5%	1/10W
R9869	1-216-833-11	METAL CHIP	10K	5%	1/10W
R9882	1-218-665-11	METAL CHIP	75	0.50%	1/10W
R9883	1-216-838-11	METAL CHIP	27K	5%	1/10W
R9884	1-218-665-11	METAL CHIP	75	0.50%	1/10W
R9885	1-218-665-11	METAL CHIP	75	0.50%	1/10W
R9886	1-218-665-11	METAL CHIP	75	0.50%	1/10W
R9887	1-218-665-11	METAL CHIP	75	0.50%	1/10W
R9888	1-218-847-11	METAL CHIP	1K	0.50%	1/10W
R9890	1-218-665-11	METAL CHIP	75	0.50%	1/10W
R9891	1-216-809-11	METAL CHIP	100	5%	1/10W

RESISTOR BRIDGE

RB9500	1-234-524-21	RES, CHIP NETWORK 33	(3216)
RB9510	1-233-576-11	RES, CHIP NETWORK 100	(3216)
RB9511	1-233-574-11	RES, CHIP NETWORK 10	(3216)
RB9512	1-233-574-11	RES, CHIP NETWORK 10	(3216)
RB9516	1-236-908-11	NETWORK RESISTOR(CHIP)	10K
RB9517	1-236-908-11	NETWORK RESISTOR(CHIP)	10K

REF. NO.	PART NO.	DESCRIPTION	VALUES

VARISTOR

VD9500	6-500-701-01	DIODE	PGB0010603NR
VD9501	6-500-701-01	DIODE	PGB0010603NR
VD9502	6-500-701-01	DIODE	PGB0010603NR
VD9503	6-500-701-01	DIODE	PGB0010603NR
VD9504	6-500-701-01	DIODE	PGB0010603NR
VD9505	6-500-701-01	DIODE	PGB0010603NR
VD9506	6-500-701-01	DIODE	PGB0010603NR
VD9507	6-500-701-01	DIODE	PGB0010603NR
VD9518	6-500-701-01	DIODE	PGB0010603NR
VD9519	6-500-701-01	DIODE	PGB0010603NR

CRYSTAL

X9501	1-767-984-21	VIBRATOR, CRYSTAL

B

*	**A-1060-168-D**	**B BOARD, COMPLETE**
	7-682-947-01	SCREW +PSW 3X6

CAPACITOR

C3001	1-126-206-11	ELECT CHIP	100µF	20%	6.3V
C3002	1-126-206-11	ELECT CHIP	100µF	20%	6.3V
C3003	1-164-943-11	CERAMIC CHIP	0.01µF	10%	16V
C3004	1-164-943-11	CERAMIC CHIP	0.01µF	10%	16V
C3005	1-164-943-11	CERAMIC CHIP	0.01µF	10%	16V
C3006	1-164-943-11	CERAMIC CHIP	0.01µF	10%	16V
C3007	1-164-943-11	CERAMIC CHIP	0.01µF	10%	16V
C3008	1-164-943-11	CERAMIC CHIP	0.01µF	10%	16V
C3009	1-164-943-11	CERAMIC CHIP	0.01µF	10%	16V
C3010	1-164-943-11	CERAMIC CHIP	0.01µF	10%	16V
C3011	1-164-943-11	CERAMIC CHIP	0.01µF	10%	16V
C3012	1-164-943-11	CERAMIC CHIP	0.01µF	10%	16V
C3013	1-164-943-11	CERAMIC CHIP	0.01µF	10%	16V
C3014	1-165-908-11	CERAMIC CHIP	1µF	10%	10V
C3015	1-125-777-11	CERAMIC CHIP	0.1µF	10%	10V
C3016	1-137-710-11	CERAMIC CHIP	10µF	20%	6.3V
C3017	1-165-908-11	CERAMIC CHIP	1µF	10%	10V
C3018	1-125-777-11	CERAMIC CHIP	0.1µF	10%	10V
C3019	1-125-777-11	CERAMIC CHIP	0.1µF	10%	10V
C3020	1-125-777-11	CERAMIC CHIP	0.1µF	10%	10V
C3021	1-164-943-11	CERAMIC CHIP	0.01µF	10%	16V
C3022	1-125-777-11	CERAMIC CHIP	0.1µF	10%	10V
C3023	1-126-206-11	ELECT CHIP	100µF	20%	6.3V
C3024	1-125-777-11	CERAMIC CHIP	0.1µF	10%	10V
C3025	1-125-777-11	CERAMIC CHIP	0.1µF	10%	10V

B

REF. NO.	PART NO.	DESCRIPTION	VALUES		
C3026	1-125-777-11	CERAMIC CHIP	0.1µF	10%	10V
C3027	1-126-206-11	ELECT CHIP	100µF	20%	6.3V
C3028	1-125-777-11	CERAMIC CHIP	0.1µF	10%	10V
C3029	1-125-777-11	CERAMIC CHIP	0.1µF	10%	10V
C3030	1-165-908-11	CERAMIC CHIP	1µF	10%	10V
C3031	1-126-206-11	ELECT CHIP	100µF	20%	6.3V
C3032	1-164-943-11	CERAMIC CHIP	0.01µF	10%	16V
C3033	1-137-710-11	CERAMIC CHIP	10µF	20%	6.3V
C3034	1-125-777-11	CERAMIC CHIP	0.1µF	10%	10V
C3035	1-125-777-11	CERAMIC CHIP	0.1µF	10%	10V
C3036	1-125-777-11	CERAMIC CHIP	0.1µF	10%	10V
C3037	1-125-777-11	CERAMIC CHIP	0.1µF	10%	10V
C3038	1-125-777-11	CERAMIC CHIP	0.1µF	10%	10V
C3041	1-164-943-11	CERAMIC CHIP	0.01µF	10%	16V
C3042	1-126-206-11	ELECT CHIP	100µF	20%	6.3V
C3043	1-164-943-11	CERAMIC CHIP	0.01µF	10%	16V
C3044	1-128-993-21	ELECT CHIP	22µF	20%	10V
C3045	1-126-206-11	ELECT CHIP	100µF	20%	6.3V
C3046	1-164-943-11	CERAMIC CHIP	0.01µF	10%	16V
C3047	1-164-943-11	CERAMIC CHIP	0.01µF	10%	16V
C3048	1-164-943-11	CERAMIC CHIP	0.01µF	10%	16V
C3049	1-164-943-11	CERAMIC CHIP	0.01µF	10%	16V
C3050	1-164-943-11	CERAMIC CHIP	0.01µF	10%	16V
C3054	1-164-943-11	CERAMIC CHIP	0.01µF	10%	16V
C3055	1-164-943-11	CERAMIC CHIP	0.01µF	10%	16V
C3056	1-164-943-11	CERAMIC CHIP	0.01µF	10%	16V
C3058	1-137-710-11	CERAMIC CHIP	10µF	20%	6.3V
C3059	1-126-205-11	ELECT CHIP	47µF	20%	6.3V
C3061	1-125-777-11	CERAMIC CHIP	0.1µF	10%	10V
C3062	1-128-993-21	ELECT CHIP	22µF	20%	10V
C3064	1-128-993-21	ELECT CHIP	22µF	20%	10V
C3065	1-128-993-21	ELECT CHIP	22µF	20%	10V
C3066	1-126-206-11	ELECT CHIP	100µF	20%	6.3V
C3070	1-164-943-11	CERAMIC CHIP	0.01µF	10%	16V
C3071	1-164-943-11	CERAMIC CHIP	0.01µF	10%	16V
C3072	1-165-908-11	CERAMIC CHIP	1µF	10%	10V
C3073	1-165-908-11	CERAMIC CHIP	1µF	10%	10V
C3074	1-165-908-11	CERAMIC CHIP	1µF	10%	10V
C3075	1-165-908-11	CERAMIC CHIP	1µF	10%	10V
C3076	1-165-908-11	CERAMIC CHIP	1µF	10%	10V
C3077	1-165-908-11	CERAMIC CHIP	1µF	10%	10V
C3078	1-165-908-11	CERAMIC CHIP	1µF	10%	10V
C3079	1-124-779-00	ELECT CHIP	10µF	20%	16V
C3080	1-124-779-00	ELECT CHIP	10µF	20%	16V
C3081	1-124-779-00	ELECT CHIP	10µF	20%	16V
C3082	1-124-779-00	ELECT CHIP	10µF	20%	16V
C3083	1-124-779-00	ELECT CHIP	10µF	20%	16V
C3084	1-124-779-00	ELECT CHIP	10µF	20%	16V

REF. NO.	PART NO.	DESCRIPTION	VALUES		
C3085	1-125-777-11	CERAMIC CHIP	0.1µF	10%	10V
C3086	1-125-777-11	CERAMIC CHIP	0.1µF	10%	10V
C3087	1-125-777-11	CERAMIC CHIP	0.1µF	10%	10V
C3088	1-125-777-11	CERAMIC CHIP	0.1µF	10%	10V
C3089	1-125-777-11	CERAMIC CHIP	0.1µF	10%	10V
C3090	1-125-777-11	CERAMIC CHIP	0.1µF	10%	10V
C3091	1-126-206-11	ELECT CHIP	100µF	20%	6.3V
C3092	1-126-206-11	ELECT CHIP	100µF	20%	6.3V
C3093	1-125-777-11	CERAMIC CHIP	0.1µF	10%	10V
C3096	1-126-206-11	ELECT CHIP	100µF	20%	6.3V
C3098	1-126-206-11	ELECT CHIP	100µF	20%	6.3V
C3100	1-126-206-11	ELECT CHIP	100µF	20%	6.3V
C3102	1-126-206-11	ELECT CHIP	100µF	20%	6.3V
C3104	1-125-777-11	CERAMIC CHIP	0.1µF	10%	10V
C3105	1-126-206-11	ELECT CHIP	100µF	20%	6.3V
C3106	1-125-777-11	CERAMIC CHIP	0.1µF	10%	10V
C3107	1-165-908-11	CERAMIC CHIP	1µF	10%	10V
C3109	1-164-943-11	CERAMIC CHIP	0.01µF	10%	16V
C3110	1-165-908-11	CERAMIC CHIP	1µF	10%	10V
C3114	1-125-777-11	CERAMIC CHIP	0.1µF	10%	10V
C3116	1-137-710-11	CERAMIC CHIP	10µF	20%	6.3V
C3117	1-107-826-11	CERAMIC CHIP	0.1µF	10%	16V
C3118	1-117-681-11	ELECT CHIP	100µF	20%	16V
C3201	1-164-943-11	CERAMIC CHIP	0.01µF	10%	16V
C3202	1-164-943-11	CERAMIC CHIP	0.01µF	10%	16V
C3203	1-126-206-11	ELECT CHIP	100µF	20%	6.3V
C3204	1-164-943-11	CERAMIC CHIP	0.01µF	10%	16V
C3205	1-164-943-11	CERAMIC CHIP	0.01µF	10%	16V
C3206	1-126-204-11	ELECT CHIP	47µF	20%	16V
C3207	1-164-943-11	CERAMIC CHIP	0.01µF	10%	16V
C3208	1-164-943-11	CERAMIC CHIP	0.01µF	10%	16V
C3210	1-164-943-11	CERAMIC CHIP	0.01µF	10%	16V
C3211	1-164-943-11	CERAMIC CHIP	0.01µF	10%	16V
C3212	1-164-943-11	CERAMIC CHIP	0.01µF	10%	16V
C3213	1-164-943-11	CERAMIC CHIP	0.01µF	10%	16V
C3214	1-164-943-11	CERAMIC CHIP	0.01µF	10%	16V
C3215	1-164-943-11	CERAMIC CHIP	0.01µF	10%	16V
C3216	1-164-943-11	CERAMIC CHIP	0.01µF	10%	16V
C3217	1-126-206-11	ELECT CHIP	100µF	20%	6.3V
C3218	1-164-943-11	CERAMIC CHIP	0.01µF	10%	16V
C3219	1-164-943-11	CERAMIC CHIP	0.01µF	10%	16V
C3222	1-164-943-11	CERAMIC CHIP	0.01µF	10%	16V
C3224	1-164-943-11	CERAMIC CHIP	0.01µF	10%	16V
C3225	1-164-943-11	CERAMIC CHIP	0.01µF	10%	16V
C3227	1-164-943-11	CERAMIC CHIP	0.01µF	10%	16V
C3229	1-164-943-11	CERAMIC CHIP	0.01µF	10%	16V
C3231	1-164-943-11	CERAMIC CHIP	0.01µF	10%	16V
C3232	1-164-943-11	CERAMIC CHIP	0.01µF	10%	16V

B

REF. NO.	PART NO.	DESCRIPTION	VALUES		
C3233	1-164-943-11	CERAMIC CHIP	0.01µF	10%	16V
C3235	1-164-943-11	CERAMIC CHIP	0.01µF	10%	16V
C3236	1-164-943-11	CERAMIC CHIP	0.01µF	10%	16V
C3237	1-126-204-11	ELECT CHIP	47µF	20%	16V
C3238	1-164-943-11	CERAMIC CHIP	0.01µF	10%	16V
C3239	1-126-204-11	ELECT CHIP	47µF	20%	16V
C3240	1-125-777-11	CERAMIC CHIP	0.1µF	10%	10V
C3241	1-164-943-11	CERAMIC CHIP	0.01µF	10%	16V
C3242	1-164-943-11	CERAMIC CHIP	0.01µF	10%	16V
C3243	1-164-943-11	CERAMIC CHIP	0.01µF	10%	16V
C3244	1-164-943-11	CERAMIC CHIP	0.01µF	10%	16V
C3245	1-164-943-11	CERAMIC CHIP	0.01µF	10%	16V
C3246	1-164-943-11	CERAMIC CHIP	0.01µF	10%	16V
C3251	1-164-943-11	CERAMIC CHIP	0.01µF	10%	16V
C3252	1-126-603-11	ELECT CHIP	4.7µF	20%	35V
C3253	1-125-777-11	CERAMIC CHIP	0.1µF	10%	10V
C3256	1-164-943-11	CERAMIC CHIP	0.01µF	10%	16V
C3301	1-164-943-11	CERAMIC CHIP	0.01µF	10%	16V
C3302	1-125-777-11	CERAMIC CHIP	0.1µF	10%	10V
C3303	1-125-777-11	CERAMIC CHIP	0.1µF	10%	10V
C3304	1-125-777-11	CERAMIC CHIP	0.1µF	10%	10V
C3305	1-125-777-11	CERAMIC CHIP	0.1µF	10%	10V
C3306	1-164-943-11	CERAMIC CHIP	0.01µF	10%	16V
C3307	1-126-205-11	ELECT CHIP	47µF	20%	6.3V
C3308	1-126-603-11	ELECT CHIP	4.7µF	20%	35V
C3309	1-125-777-11	CERAMIC CHIP	0.1µF	10%	10V
C3310	1-125-777-11	CERAMIC CHIP	0.1µF	10%	10V
C3311	1-125-777-11	CERAMIC CHIP	0.1µF	10%	10V
C3312	1-163-021-91	CERAMIC CHIP	0.01µF	10%	50V
C3313	1-125-777-11	CERAMIC CHIP	0.1µF	10%	10V
C3314	1-126-206-11	ELECT CHIP	100µF	20%	6.3V
C3315	1-125-777-11	CERAMIC CHIP	0.1µF	10%	10V
C3316	1-164-943-11	CERAMIC CHIP	0.01µF	10%	16V
C3317	1-125-777-11	CERAMIC CHIP	0.1µF	10%	10V
C3318	1-126-205-11	ELECT CHIP	47µF	20%	6.3V
C3319	1-124-779-00	ELECT CHIP	10µF	20%	16V
C3320	1-128-993-21	ELECT CHIP	22µF	20%	10V
C3321	1-126-204-11	ELECT CHIP	47µF	20%	16V
C3322	1-126-205-11	ELECT CHIP	47µF	20%	6.3V
C3323	1-126-205-11	ELECT CHIP	47µF	20%	6.3V
C3325	1-126-246-11	ELECT CHIP	220µF	20%	4V
C3326	1-126-205-11	ELECT CHIP	47µF	20%	6.3V
C3327	1-125-777-11	CERAMIC CHIP	0.1µF	10%	10V
C3328	1-125-777-11	CERAMIC CHIP	0.1µF	10%	10V
C3329	1-165-643-21	ELECT CHIP	150µF	20%	4V
C3330	1-125-777-11	CERAMIC CHIP	0.1µF	10%	10V
C3331	1-125-777-11	CERAMIC CHIP	0.1µF	10%	10V
C3332	1-125-777-11	CERAMIC CHIP	0.1µF	10%	10V

REF. NO.	PART NO.	DESCRIPTION	VALUES		
C3333	1-125-777-11	CERAMIC CHIP	0.1µF	10%	10V
C3334	1-125-777-11	CERAMIC CHIP	0.1µF	10%	10V
C3335	1-125-777-11	CERAMIC CHIP	0.1µF	10%	10V
C3336	1-164-943-11	CERAMIC CHIP	0.01µF	10%	16V
C3337	1-164-943-11	CERAMIC CHIP	0.01µF	10%	16V
C3338	1-164-943-11	CERAMIC CHIP	0.01µF	10%	16V
C3339	1-125-777-11	CERAMIC CHIP	0.1µF	10%	10V
C3340	1-124-779-00	ELECT CHIP	10µF	20%	16V
C3341	1-125-777-11	CERAMIC CHIP	0.1µF	10%	10V
C3342	1-125-777-11	CERAMIC CHIP	0.1µF	10%	10V
C3343	1-125-777-11	CERAMIC CHIP	0.1µF	10%	10V
C3344	1-164-943-11	CERAMIC CHIP	0.01µF	10%	16V
C3345	1-125-777-11	CERAMIC CHIP	0.1µF	10%	10V
C3346	1-125-777-11	CERAMIC CHIP	0.1µF	10%	10V
C3347	1-164-943-11	CERAMIC CHIP	0.01µF	10%	16V
C3348	1-164-943-11	CERAMIC CHIP	0.01µF	10%	16V
C3349	1-125-777-11	CERAMIC CHIP	0.1µF	10%	10V
C3350	1-125-777-11	CERAMIC CHIP	0.1µF	10%	10V
C3351	1-164-854-11	CERAMIC CHIP	15pF	5%	50V
C3352	1-125-777-11	CERAMIC CHIP	0.1µF	10%	10V
C3353	1-124-779-00	ELECT CHIP	10µF	20%	16V
C3354	1-164-854-11	CERAMIC CHIP	15pF	5%	50V
C3355	1-125-777-11	CERAMIC CHIP	0.1µF	10%	10V
C3356	1-124-779-00	ELECT CHIP	10µF	20%	16V
C3357	1-125-777-11	CERAMIC CHIP	0.1µF	10%	10V
C3359	1-164-943-11	CERAMIC CHIP	0.01µF	10%	16V
C3360	1-124-779-00	ELECT CHIP	10µF	20%	16V
C3361	1-164-937-11	CERAMIC CHIP	0.001µF	10%	50V
C3362	1-164-937-11	CERAMIC CHIP	0.001µF	10%	50V
C3364	1-164-943-11	CERAMIC CHIP	0.01µF	10%	16V
C3365	1-125-777-11	CERAMIC CHIP	0.1µF	10%	10V
C3366	1-164-943-11	CERAMIC CHIP	0.01µF	10%	16V
C3367	1-164-943-11	CERAMIC CHIP	0.01µF	10%	16V
C3368	1-164-943-11	CERAMIC CHIP	0.01µF	10%	16V
C3369	1-164-943-11	CERAMIC CHIP	0.01µF	10%	16V
C3370	1-125-777-11	CERAMIC CHIP	0.1µF	10%	10V
C3371	1-125-777-11	CERAMIC CHIP	0.1µF	10%	10V
C3372	1-164-943-11	CERAMIC CHIP	0.01µF	10%	16V
C3373	1-164-943-11	CERAMIC CHIP	0.01µF	10%	16V
C3374	1-164-943-11	CERAMIC CHIP	0.01µF	10%	16V
C3375	1-164-943-11	CERAMIC CHIP	0.01µF	10%	16V
C3376	1-164-943-11	CERAMIC CHIP	0.01µF	10%	16V
C3377	1-164-943-11	CERAMIC CHIP	0.01µF	10%	16V
C3378	1-164-943-11	CERAMIC CHIP	0.01µF	10%	16V
C3379	1-164-943-11	CERAMIC CHIP	0.01µF	10%	16V
C3380	1-164-943-11	CERAMIC CHIP	0.01µF	10%	16V
C3381	1-164-943-11	CERAMIC CHIP	0.01µF	10%	16V
C3382	1-164-943-11	CERAMIC CHIP	0.01µF	10%	16V

B

REF. NO.	PART NO.	DESCRIPTION	VALUES		
C3383	1-164-943-11	CERAMIC CHIP	0.01µF	10%	16V
C3384	1-164-943-11	CERAMIC CHIP	0.01µF	10%	16V
C3385	1-164-943-11	CERAMIC CHIP	0.01µF	10%	16V
C3386	1-164-943-11	CERAMIC CHIP	0.01µF	10%	16V
C3387	1-164-943-11	CERAMIC CHIP	0.01µF	10%	16V
C3388	1-164-943-11	CERAMIC CHIP	0.01µF	10%	16V
C3389	1-164-943-11	CERAMIC CHIP	0.01µF	10%	16V
C3390	1-164-943-11	CERAMIC CHIP	0.01µF	10%	16V
C3391	1-164-943-11	CERAMIC CHIP	0.01µF	10%	16V
C3392	1-164-943-11	CERAMIC CHIP	0.01µF	10%	16V
C3393	1-164-943-11	CERAMIC CHIP	0.01µF	10%	16V
C3394	1-164-943-11	CERAMIC CHIP	0.01µF	10%	16V
C3395	1-164-943-11	CERAMIC CHIP	0.01µF	10%	16V
C3396	1-164-943-11	CERAMIC CHIP	0.01µF	10%	16V
C3397	1-164-943-11	CERAMIC CHIP	0.01µF	10%	16V
C3398	1-164-943-11	CERAMIC CHIP	0.01µF	10%	16V
C3399	1-164-943-11	CERAMIC CHIP	0.01µF	10%	16V
C3400	1-164-943-11	CERAMIC CHIP	0.01µF	10%	16V
C3401	1-164-943-11	CERAMIC CHIP	0.01µF	10%	16V
C3402	1-164-943-11	CERAMIC CHIP	0.01µF	10%	16V
C3403	1-164-943-11	CERAMIC CHIP	0.01µF	10%	16V
C3404	1-164-943-11	CERAMIC CHIP	0.01µF	10%	16V
C3405	1-164-943-11	CERAMIC CHIP	0.01µF	10%	16V
C3406	1-164-943-11	CERAMIC CHIP	0.01µF	10%	16V
C3407	1-164-943-11	CERAMIC CHIP	0.01µF	10%	16V
C3408	1-164-943-11	CERAMIC CHIP	0.01µF	10%	16V
C3409	1-128-993-21	ELECT CHIP	22µF	20%	10V
C3410	1-128-993-21	ELECT CHIP	22µF	20%	10V
C3416	1-126-206-11	ELECT CHIP	100µF	20%	6.3V
C3417	1-125-777-11	CERAMIC CHIP	0.1µF	10%	10V
C3418	1-104-601-11	ELECT CHIP	10µF	20%	10V
C3419	1-104-601-11	ELECT CHIP	10µF	20%	10V
C3420	1-104-601-11	ELECT CHIP	10µF	20%	10V
C3422	1-128-993-21	ELECT CHIP	22µF	20%	10V
C3423	1-164-874-11	CERAMIC CHIP	100pF	5%	50V
C3501	1-164-943-11	CERAMIC CHIP	0.01µF	10%	16V
C3503	1-164-943-11	CERAMIC CHIP	0.01µF	10%	16V
C3504	1-164-943-11	CERAMIC CHIP	0.01µF	10%	16V
C3505	1-164-943-11	CERAMIC CHIP	0.01µF	10%	16V
C3506	1-164-943-11	CERAMIC CHIP	0.01µF	10%	16V
C3507	1-164-943-11	CERAMIC CHIP	0.01µF	10%	16V
C3508	1-164-943-11	CERAMIC CHIP	0.01µF	10%	16V
C3509	1-164-943-11	CERAMIC CHIP	0.01µF	10%	16V
C3510	1-125-777-11	CERAMIC CHIP	0.1µF	10%	10V
C3511	1-164-943-11	CERAMIC CHIP	0.01µF	10%	16V
C3512	1-164-943-11	CERAMIC CHIP	0.01µF	10%	16V
C3513	1-164-943-11	CERAMIC CHIP	0.01µF	10%	16V
C3514	1-164-943-11	CERAMIC CHIP	0.01µF	10%	16V

REF. NO.	PART NO.	DESCRIPTION	VALUES		
C3515	1-164-943-11	CERAMIC CHIP	0.01µF	10%	16V
C3516	1-164-943-11	CERAMIC CHIP	0.01µF	10%	16V
C3517	1-164-943-11	CERAMIC CHIP	0.01µF	10%	16V
C3518	1-164-943-11	CERAMIC CHIP	0.01µF	10%	16V
C3519	1-164-943-11	CERAMIC CHIP	0.01µF	10%	16V
C3520	1-164-943-11	CERAMIC CHIP	0.01µF	10%	16V
C3521	1-164-943-11	CERAMIC CHIP	0.01µF	10%	16V
C3522	1-164-943-11	CERAMIC CHIP	0.01µF	10%	16V
C3523	1-164-943-11	CERAMIC CHIP	0.01µF	10%	16V
C3524	1-164-943-11	CERAMIC CHIP	0.01µF	10%	16V
C3525	1-164-943-11	CERAMIC CHIP	0.01µF	10%	16V
C3526	1-164-943-11	CERAMIC CHIP	0.01µF	10%	16V
C3527	1-164-943-11	CERAMIC CHIP	0.01µF	10%	16V
C3528	1-164-943-11	CERAMIC CHIP	0.01µF	10%	16V
C3529	1-164-943-11	CERAMIC CHIP	0.01µF	10%	16V
C3530	1-164-943-11	CERAMIC CHIP	0.01µF	10%	16V
C3531	1-164-943-11	CERAMIC CHIP	0.01µF	10%	16V
C3532	1-124-779-00	ELECT CHIP	10µF	20%	16V
C3533	1-124-779-00	ELECT CHIP	10µF	20%	16V
C3534	1-125-777-11	CERAMIC CHIP	0.1µF	10%	10V
C3535	1-125-777-11	CERAMIC CHIP	0.1µF	10%	10V
C3536	1-137-710-11	CERAMIC CHIP	10µF	20%	6.3V
C3537	1-164-943-11	CERAMIC CHIP	0.01µF	10%	16V
C3538	1-164-937-11	CERAMIC CHIP	0.001µF	10%	50V
C3539	1-137-710-11	CERAMIC CHIP	10µF	20%	6.3V
C3540	1-125-777-11	CERAMIC CHIP	0.1µF	10%	10V
C3541	1-164-937-11	CERAMIC CHIP	0.001µF	10%	50V
C3542	1-164-943-11	CERAMIC CHIP	0.01µF	10%	16V
C3543	1-125-777-11	CERAMIC CHIP	0.1µF	10%	10V
C3544	1-125-777-11	CERAMIC CHIP	0.1µF	10%	10V
C3545	1-164-937-11	CERAMIC CHIP	0.001µF	10%	50V
C3546	1-125-777-11	CERAMIC CHIP	0.1µF	10%	10V
C3547	1-125-777-11	CERAMIC CHIP	0.1µF	10%	10V
C3548	1-164-943-11	CERAMIC CHIP	0.01µF	10%	16V
C3549	1-125-777-11	CERAMIC CHIP	0.1µF	10%	10V
C3550	1-137-710-11	CERAMIC CHIP	10µF	20%	6.3V
C3551	1-164-937-11	CERAMIC CHIP	0.001µF	10%	50V
C3552	1-164-943-11	CERAMIC CHIP	0.01µF	10%	16V
C3553	1-125-777-11	CERAMIC CHIP	0.1µF	10%	10V
C3554	1-164-937-11	CERAMIC CHIP	0.001µF	10%	50V
C3555	1-164-943-11	CERAMIC CHIP	0.01µF	10%	16V
C3556	1-125-777-11	CERAMIC CHIP	0.1µF	10%	10V
C3557	1-137-710-11	CERAMIC CHIP	10µF	20%	6.3V
C3558	1-137-710-11	CERAMIC CHIP	10µF	20%	6.3V
C3559	1-137-710-11	CERAMIC CHIP	10µF	20%	6.3V
C3560	1-125-777-11	CERAMIC CHIP	0.1µF	10%	10V
C3561	1-164-943-11	CERAMIC CHIP	0.01µF	10%	16V
C3562	1-164-937-11	CERAMIC CHIP	0.001µF	10%	50V

B

REF. NO.	PART NO.	DESCRIPTION	VALUES		
C3602	1-125-777-11	CERAMIC CHIP	0.1µF	10%	10V
C3603	1-164-943-11	CERAMIC CHIP	0.01µF	10%	16V
C3604	1-128-993-21	ELECT CHIP	22µF	20%	10V
C3605	1-125-777-11	CERAMIC CHIP	0.1µF	10%	10V
C3606	1-128-993-21	ELECT CHIP	22µF	20%	10V
C3607	1-164-943-11	CERAMIC CHIP	0.01µF	10%	16V
C3608	1-125-777-11	CERAMIC CHIP	0.1µF	10%	10V
C3609	1-164-943-11	CERAMIC CHIP	0.01µF	10%	16V
C3610	1-125-777-11	CERAMIC CHIP	0.1µF	10%	10V
C3611	1-128-993-21	ELECT CHIP	22µF	20%	10V
C3612	1-125-777-11	CERAMIC CHIP	0.1µF	10%	10V
C3613	1-128-993-21	ELECT CHIP	22µF	20%	10V
C3614	1-128-993-21	ELECT CHIP	22µF	20%	10V
C3615	1-164-943-11	CERAMIC CHIP	0.01µF	10%	16V
C3616	1-164-943-11	CERAMIC CHIP	0.01µF	10%	16V
C3617	1-128-993-21	ELECT CHIP	22µF	20%	10V
C3618	1-125-777-11	CERAMIC CHIP	0.1µF	10%	10V
C3619	1-125-777-11	CERAMIC CHIP	0.1µF	10%	10V
C3620	1-137-710-11	CERAMIC CHIP	10µF	20%	6.3V
C3621	1-125-777-11	CERAMIC CHIP	0.1µF	10%	10V
C3622	1-125-777-11	CERAMIC CHIP	0.1µF	10%	10V
C3625	1-125-777-11	CERAMIC CHIP	0.1µF	10%	10V
C3626	1-125-777-11	CERAMIC CHIP	0.1µF	10%	10V
C3627	1-117-681-11	ELECT CHIP	100µF	20%	16V
C3628	1-117-681-11	ELECT CHIP	100µF	20%	16V
C3629	1-125-777-11	CERAMIC CHIP	0.1µF	10%	10V
C3630	1-164-937-11	CERAMIC CHIP	0.001µF	10%	50V
C3631	1-164-852-11	CERAMIC CHIP	12pF	5%	50V
C3632	1-164-852-11	CERAMIC CHIP	12pF	5%	50V
C3633	1-125-777-11	CERAMIC CHIP	0.1µF	10%	10V
C3634	1-125-777-11	CERAMIC CHIP	0.1µF	10%	10V
C3635	1-164-943-11	CERAMIC CHIP	0.01µF	10%	16V
C3636	1-164-937-11	CERAMIC CHIP	0.001µF	10%	50V
C3637	1-125-777-11	CERAMIC CHIP	0.1µF	10%	10V
C3638	1-125-777-11	CERAMIC CHIP	0.1µF	10%	10V
C3639	1-164-856-81	CERAMIC CHIP	18pF	5%	50V
C3640	1-164-854-11	CERAMIC CHIP	15pF	5%	50V
C3641	1-126-206-11	ELECT CHIP	100µF	20%	6.3V
C3642	1-164-943-11	CERAMIC CHIP	0.01µF	10%	16V
C3644	1-125-777-11	CERAMIC CHIP	0.1µF	10%	10V
C3646	1-126-206-11	ELECT CHIP	100µF	20%	6.3V
C3647	1-164-943-11	CERAMIC CHIP	0.01µF	10%	16V
C3648	1-125-777-11	CERAMIC CHIP	0.1µF	10%	10V
C3649	1-164-937-11	CERAMIC CHIP	0.001µF	10%	50V
C3650	1-165-908-11	CERAMIC CHIP	1µF	10%	10V
C3653	1-164-943-11	CERAMIC CHIP	0.01µF	10%	16V
C3654	1-164-943-11	CERAMIC CHIP	0.01µF	10%	16V
C3655	1-125-777-11	CERAMIC CHIP	0.1µF	10%	10V
C3656	1-107-826-11	CERAMIC CHIP	0.1µF	10%	16V
C3659	1-107-826-11	CERAMIC CHIP	0.1µF	10%	16V
C3660	1-107-826-11	CERAMIC CHIP	0.1µF	10%	16V
C3661	1-107-826-11	CERAMIC CHIP	0.1µF	10%	16V
C3662	1-164-872-11	CERAMIC CHIP	82pF	5%	50V
C3663	1-107-826-11	CERAMIC CHIP	0.1µF	10%	16V
C3664	1-164-872-11	CERAMIC CHIP	82pF	5%	50V
C3665	1-117-681-11	ELECT CHIP	100µF	20%	16V
C3666	1-164-943-11	CERAMIC CHIP	0.01µF	10%	16V
C3667	1-164-943-11	CERAMIC CHIP	0.01µF	10%	16V
C3668	1-137-987-81	CERAMIC CHIP	0.068µF	10%	10V
C3669	1-125-777-11	CERAMIC CHIP	0.1µF	10%	10V
C3670	1-117-681-11	ELECT CHIP	100µF	20%	16V
C3671	1-164-943-11	CERAMIC CHIP	0.01µF	10%	16V
C3672	1-125-777-11	CERAMIC CHIP	0.1µF	10%	10V
C3673	1-164-943-11	CERAMIC CHIP	0.01µF	10%	16V
C3674	1-137-987-81	CERAMIC CHIP	0.068µF	10%	10V
C3675	1-164-943-11	CERAMIC CHIP	0.01µF	10%	16V
C3676	1-137-987-81	CERAMIC CHIP	0.068µF	10%	10V
C3677	1-164-937-11	CERAMIC CHIP	0.001µF	10%	50V
C3678	1-164-942-11	CERAMIC CHIP	0.0068µF	10%	16V
C3679	1-164-937-11	CERAMIC CHIP	0.001µF	10%	50V
C3680	1-164-942-11	CERAMIC CHIP	0.0068µF	10%	16V
C3681	1-164-937-11	CERAMIC CHIP	0.001µF	10%	50V
C3682	1-164-942-11	CERAMIC CHIP	0.0068µF	10%	16V
C3683	1-125-777-11	CERAMIC CHIP	0.1µF	10%	10V
C3802	1-117-681-11	ELECT CHIP	100µF	20%	16V
C3803	1-125-777-11	CERAMIC CHIP	0.1µF	10%	10V
C3804	1-126-206-11	ELECT CHIP	100µF	20%	6.3V
C3805	1-125-777-11	CERAMIC CHIP	0.1µF	10%	10V
C3806	1-164-852-11	CERAMIC CHIP	12pF	5%	50V
C3807	1-164-852-11	CERAMIC CHIP	12pF	5%	50V
C3808	1-164-842-11	CERAMIC CHIP	2pF	0.25pF	50V
C3809	1-127-988-81	CERAMIC CHIP	15000pF	10%	16V
C3811	1-125-777-11	CERAMIC CHIP	0.1µF	10%	10V
C3812	1-164-941-11	CERAMIC CHIP	0.0047µF	10%	16V
C3813	1-125-777-11	CERAMIC CHIP	0.1µF	10%	10V
C3814	1-125-777-11	CERAMIC CHIP	0.1µF	10%	10V
C3816	1-164-941-11	CERAMIC CHIP	0.0047µF	10%	16V
C3817	1-125-777-11	CERAMIC CHIP	0.1µF	10%	10V
C3818	1-125-777-11	CERAMIC CHIP	0.1µF	10%	10V
C3819	1-164-943-11	CERAMIC CHIP	0.01µF	10%	16V
C3820	1-164-943-11	CERAMIC CHIP	0.01µF	10%	16V
C3821	1-125-777-11	CERAMIC CHIP	0.1µF	10%	10V

B

	REF. NO.	PART NO.	DESCRIPTION	VALUES
		CONNECTOR		
*	CN3501	1-818-562-21	CONNECTOR (RECEPTACLE)	17P
*	CN3502	1-818-562-21	CONNECTOR (RECEPTACLE)	17P
*	CN3603	1-691-551-11	PIN, CONNECTOR (SMD)	8P
	CN3605	1-794-087-11	CONNECTOR, BOARD TO BOARD	19P
	CN3801	1-770-627-21	PIN, CONNECTOR	10P
		DIODE		
	D3205	8-719-050-38	DIODE	M1MA152WK-T1
	D3206	8-719-050-37	DIODE	M1MA152WA-T1
	D3301	8-719-083-58	DIODE	UDZSTE-173.9B
	D3501	8-719-081-97	DIODE	MMDL914T1
	D3502	8-719-081-97	DIODE	MMDL914T1
	D3503	8-719-081-97	DIODE	MMDL914T1
	D3504	8-719-081-97	DIODE	MMDL914T1
	D3505	8-719-081-97	DIODE	MMDL914T1
	D3506	8-719-081-97	DIODE	MMDL914T1
	D3507	8-719-081-97	DIODE	MMDL914T1
	D3508	8-719-081-97	DIODE	MMDL914T1
	D3509	8-719-081-97	DIODE	MMDL914T1
	D3510	8-719-081-97	DIODE	MMDL914T1
	D3609	8-719-050-37	DIODE	M1MA152WA-T1
	D3610	8-719-050-38	DIODE	M1MA152WK-T1
	D3611	8-719-050-37	DIODE	M1MA152WA-T1
	D3612	8-719-050-38	DIODE	M1MA152WK-T1
	D3613	8-719-081-97	DIODE	MMDL914T1
	D3801	8-719-081-97	DIODE	MMDL914T1
	D3804	8-719-081-97	DIODE	MMDL914T1
	D3808	8-719-050-38	DIODE	M1MA152WK-T1
	D3809	8-719-050-37	DIODE	M1MA152WA-T1
		FERRITE BEAD		
	FB3203	1-469-110-21	FERRITE	0µH
	FB3204	1-216-864-11	SHORT CHIP	
	FB3301	1-414-229-11	FERRITE	0µH
	FB3302	1-414-229-11	FERRITE	0µH
		FILTER		
	FL3001	1-234-177-21	FERRITE	0µH
	FL3002	1-234-177-21	FERRITE	0µH
	FL3003	1-234-177-21	FERRITE	0µH
	FL3004	1-234-177-21	FERRITE	0µH
	FL3005	1-234-560-21	FILTER, LOW PASS	
	FL3006	1-234-560-21	FILTER, LOW PASS	
	FL3007	1-234-177-21	FERRITE	0µH
	FL3200	1-234-177-21	FERRITE	0µH
	FL3201	1-234-177-21	FERRITE	0µH
	FL3601	1-234-494-21	FILTER, EMI REMOVAL (SMD)	
	FL3602	1-234-494-21	FILTER, EMI REMOVAL (SMD)	
	FL3604	1-234-494-21	FILTER, EMI REMOVAL (SMD)	
	FL3605	1-234-494-21	FILTER, EMI REMOVAL (SMD)	
	FL3606	1-234-494-21	FILTER, EMI REMOVAL (SMD)	
		IC		
	IC3001	8-753-209-17	IC	CXD3807GB
	IC3002	6-705-403-01	IC	PQ070XZ01ZPH
	IC3003	6-706-873-01	IC	MT48LC4M16A2P-75-Y14W-G
	IC3004	6-706-892-01	IC	SM5302AS-G-ET
	IC3005	6-706-892-01	IC	SM5302AS-G-ET
	IC3006	8-759-680-92	IC	MAX4018EEE-TG068
	IC3008	8-759-581-11	IC	NJM2125F(TE2)
	IC3201	8-752-422-52	IC	CXD2097BQ
	IC3202	6-705-992-11	IC	HY57V161610ETP-7DR
	IC3204	8-759-669-78	IC	TLC2933IPWR-12
	IC3301	8-759-669-75	IC	TLC2932IPWR
	IC3302	6-706-487-01	IC	TC7SH08FU(T5RSOYJF)
	IC3303	6-705-921-01	IC	TLV5734
	IC3304	6-704-992-01	IC	CXD9707DGP
	IC3305	6-707-044-01	IC	CYISM560BSXT
	IC3306	6-706-155-01	IC	MT48LC2M32B2P-6-Y14W
	IC3307	6-706-155-01	IC	MT48LC2M32B2P-6-Y14W
	IC3308	8-759-592-42	IC	TC7SZ00FU(TE85R)
	IC3309	6-705-403-01	IC	PQ070XZ01ZPH
	IC3502	6-702-973-01	IC	CXD9690Q
	IC3503	6-704-519-01	IC	THC63LVD103
	IC3504	6-704-632-01	IC	THC63LVD104A
	IC3602	6-704-879-01	IC	NJU7223DL1-25
	IC3603	8-759-695-94	IC	TAR5S33(TE85R)
	IC3604	8-753-228-50	IC	CXQ91F318-106R
	IC3605	6-801-402-01	IC	BD4729GTR
	IC3606	6-801-402-01	IC	BD4729GTR
	IC3607	6-702-688-01	IC	M24C64-WMN6T(B)
	IC3608	6-706-487-01	IC	TC7SH08FU(T5RSOYJF)
	IC3801	6-804-883-01	IC	M306V3FGFP-04GW2
	IC3802	8-759-488-29	IC	TC7W66FU(TE12R)
	IC3803	6-704-067-01	IC	M24128-BWMN6T(A)
	IC3804	8-759-677-29	IC	TC74LVX125FT(EL)
	IC3805	6-701-680-01	IC	PST3629NR
	IC3806	6-701-680-01	IC	PST3629NR

B

REF. NO.	PART NO.	DESCRIPTION	VALUES
IC3807	6-801-402-01	IC	BD4729GTR
IC3808	6-702-767-01	IC	BD4745G-TR

COIL

REF. NO.	PART NO.	DESCRIPTION	VALUES
L3001	1-469-549-21	INDUCTOR	1µH
L3004	1-469-549-21	INDUCTOR	1µH
L3005	1-469-549-21	INDUCTOR	1µH
L3006	1-469-549-21	INDUCTOR	1µH
L3007	1-469-549-21	INDUCTOR	1µH
L3008	1-469-549-21	INDUCTOR	1µH
L3009	1-469-549-21	INDUCTOR	1µH
L3010	1-469-549-21	INDUCTOR	1µH
L3011	1-412-029-11	INDUCTOR	10µH
L3012	1-412-029-11	INDUCTOR	10µH
L3013	1-469-549-21	INDUCTOR	1µH
L3015	1-469-555-21	INDUCTOR	10µH
L3016	1-469-549-21	INDUCTOR	1µH
L3017	1-469-549-21	INDUCTOR	1µH
L3201	1-469-549-21	INDUCTOR	1µH
L3202	1-469-561-21	INDUCTOR	100µH
L3203	1-469-561-21	INDUCTOR	100µH
L3204	1-469-549-21	INDUCTOR	1µH
L3205	1-469-549-21	INDUCTOR	1µH
L3206	1-469-549-21	INDUCTOR	1µH
L3301	1-469-561-21	INDUCTOR	100µH
L3302	1-469-561-21	INDUCTOR	100µH
L3303	1-469-555-21	INDUCTOR	10µH
L3304	1-469-549-21	INDUCTOR	1µH
L3305	1-412-029-11	INDUCTOR	10µH
L3306	1-469-555-21	INDUCTOR	10µH
L3307	1-412-053-21	INDUCTOR	1.5µH
L3308	1-412-053-21	INDUCTOR	1.5µH
L3309	1-412-058-11	INDUCTOR	10µH
L3310	1-412-029-11	INDUCTOR	10µH
L3311	1-412-029-11	INDUCTOR	10µH
L3312	1-412-029-11	INDUCTOR	10µH
L3313	1-469-549-21	INDUCTOR	1µH
L3314	1-469-549-21	INDUCTOR	1µH
L3315	1-469-549-21	INDUCTOR	1µH
L3316	1-469-555-21	INDUCTOR	10µH
L3502	1-469-555-21	INDUCTOR	10µH
L3503	1-412-026-11	INDUCTOR	1µH
L3504	1-412-029-11	INDUCTOR	10µH
L3505	1-469-555-21	INDUCTOR	10µH
L3506	1-469-555-21	INDUCTOR	10µH
L3507	1-469-555-21	INDUCTOR	10µH
L3508	1-469-555-21	INDUCTOR	10µH
L3601	1-469-555-21	INDUCTOR	10µH
L3602	1-469-555-21	INDUCTOR	10µH
L3603	1-469-555-21	INDUCTOR	10µH
L3604	1-469-555-21	INDUCTOR	10µH
L3605	1-469-555-21	INDUCTOR	10µH
L3606	1-469-555-21	INDUCTOR	10µH
L3801	1-469-555-21	INDUCTOR	10µH
L3802	1-469-555-21	INDUCTOR	10µH

TRANSISTOR

REF. NO.	PART NO.	DESCRIPTION	VALUES
Q3001	8-729-120-28	TRANSISTOR	2SC1623-L5L6
Q3002	8-729-117-73	TRANSISTOR	2SC4178-F14
Q3003	8-729-117-73	TRANSISTOR	2SC4178-F14
Q3004	8-729-117-73	TRANSISTOR	2SC4178-F14
Q3005	8-729-117-73	TRANSISTOR	2SC4178-F14
Q3006	8-729-117-73	TRANSISTOR	2SC4178-F14
Q3007	8-729-122-63	TRANSISTOR	2SA1226-E4
Q3008	8-729-122-63	TRANSISTOR	2SA1226-E4
Q3009	8-729-122-63	TRANSISTOR	2SA1226-E4
Q3010	8-729-122-63	TRANSISTOR	2SA1226-E4
Q3011	8-729-117-73	TRANSISTOR	2SC4178-F14
Q3012	8-729-117-73	TRANSISTOR	2SC4178-F14
Q3013	8-729-122-63	TRANSISTOR	2SA1226-E4
Q3014	8-729-122-63	TRANSISTOR	2SA1226-E4
Q3015	8-729-122-63	TRANSISTOR	2SA1226-E4
Q3016	8-729-122-63	TRANSISTOR	2SA1226-E4
Q3018	8-729-122-63	TRANSISTOR	2SA1226-E4
Q3019	8-729-122-63	TRANSISTOR	2SA1226-E4
Q3020	8-729-122-63	TRANSISTOR	2SA1226-E4
Q3021	8-729-117-73	TRANSISTOR	2SC4178-F14
Q3203	8-729-905-35	TRANSISTOR	2SC4081-R
Q3204	8-729-026-53	TRANSISTOR	2SA1576A-T106-QR
Q3302	8-729-905-35	TRANSISTOR	2SC4081-R
Q3303	8-729-905-35	TRANSISTOR	2SC4081-R
Q3304	8-729-117-73	TRANSISTOR	2SC4178-F14
Q3305	8-729-117-73	TRANSISTOR	2SC4178-F14
Q3306	8-729-117-73	TRANSISTOR	2SC4178-F14
Q3307	8-729-122-63	TRANSISTOR	2SA1226-E4
Q3308	8-729-122-63	TRANSISTOR	2SA1226-E4
Q3309	8-729-122-63	TRANSISTOR	2SA1226-E4
Q3603	8-729-905-35	TRANSISTOR	2SC4081-R
Q3604	8-729-905-35	TRANSISTOR	2SC4081-R
Q3606	8-729-905-35	TRANSISTOR	2SC4081-R
Q3607	8-729-905-35	TRANSISTOR	2SC4081-R
Q3608	8-729-901-47	TRANSISTOR	DTA143EK

B

REF. NO.	PART NO.	DESCRIPTION	VALUES		
Q3610	8-729-027-23	TRANSISTOR	DTA114EKA-T146		
Q3612	8-729-905-35	TRANSISTOR	2SC4081-R		
Q3615	8-729-028-28	TRANSISTOR	2SK2036(TE85L)		
Q3616	8-729-905-35	TRANSISTOR	2SC4081-R		
Q3617	8-729-905-35	TRANSISTOR	2SC4081-R		
Q3619	8-729-028-28	TRANSISTOR	2SK2036(TE85L)		
Q3620	8-729-905-35	TRANSISTOR	2SC4081-R		
Q3621	8-729-026-53	TRANSISTOR	2SA1576A-T106-QR		
Q3622	8-729-026-53	TRANSISTOR	2SA1576A-T106-QR		
Q3623	8-729-026-53	TRANSISTOR	2SA1576A-T106-QR		
Q3624	8-729-026-53	TRANSISTOR	2SA1576A-T106-QR		
Q3801	8-729-905-35	TRANSISTOR	2SC4081-R		
Q3802	8-729-027-23	TRANSISTOR	DTA114EKA-T146		
Q3803	8-729-905-35	TRANSISTOR	2SC4081-R		
Q3804	8-729-905-35	TRANSISTOR	2SC4081-R		
Q3805	8-729-905-35	TRANSISTOR	2SC4081-R		
Q3807	8-729-905-35	TRANSISTOR	2SC4081-R		
Q3808	8-729-028-28	TRANSISTOR	2SK2036(TE85L)		
Q3809	8-729-028-28	TRANSISTOR	2SK2036(TE85L)		
	RESISTOR				
R3001	1-218-958-11	RES-CHIP	2.7K	5%	1/16W
R3002	1-218-965-11	RES-CHIP	10K	5%	1/16W
R3005	1-218-990-11	SHORT CHIP			
R3006	1-218-965-11	RES-CHIP	10K	5%	1/16W
R3008	1-218-990-11	SHORT CHIP			
R3009	1-218-929-11	RES-CHIP	10	5%	1/16W
R3010	1-218-929-11	RES-CHIP	10	5%	1/16W
R3011	1-218-929-11	RES-CHIP	10	5%	1/16W
R3012	1-218-990-11	SHORT CHIP			
R3013	1-218-990-11	SHORT CHIP			
R3014	1-218-958-11	RES-CHIP	2.7K	5%	1/16W
R3015	1-208-699-11	METAL CHIP	4.7K	0.50%	1/16W
R3016	1-218-945-11	RES-CHIP	220	5%	1/16W
R3017	1-208-699-11	METAL CHIP	4.7K	0.50%	1/16W
R3018	1-218-965-11	RES-CHIP	10K	5%	1/16W
R3020	1-218-965-11	RES-CHIP	10K	5%	1/16W
R3022	1-218-965-11	RES-CHIP	10K	5%	1/16W
R3023	1-218-990-11	SHORT CHIP			
R3024	1-218-937-11	RES-CHIP	47	5%	1/16W
R3025	1-218-937-11	RES-CHIP	47	5%	1/16W
R3026	1-218-937-11	RES-CHIP	47	5%	1/16W
R3027	1-218-990-11	SHORT CHIP			
R3028	1-218-990-11	SHORT CHIP			
R3029	1-218-990-11	SHORT CHIP			
R3030	1-218-990-11	SHORT CHIP			

REF. NO.	PART NO.	DESCRIPTION	VALUES		
R3031	1-218-965-11	RES-CHIP	10K	5%	1/16W
R3032	1-218-990-11	SHORT CHIP			
R3033	1-218-990-11	SHORT CHIP			
R3034	1-218-990-11	SHORT CHIP			
R3036	1-208-699-11	METAL CHIP	4.7K	0.50%	1/16W
R3038	1-218-965-11	RES-CHIP	10K	5%	1/16W
R3039	1-220-884-81	METAL CHIP	39	0.50%	1/16W
R3040	1-218-929-11	RES-CHIP	10	5%	1/16W
R3041	1-218-945-11	RES-CHIP	220	5%	1/16W
R3042	1-208-699-11	METAL CHIP	4.7K	0.50%	1/16W
R3043	1-208-683-11	METAL CHIP	1K	0.50%	1/16W
R3044	1-218-849-11	METAL CHIP	1.2K	0.50%	1/10W
R3045	1-208-885-11	METAL CHIP	820	0.50%	1/16W
R3046	1-218-943-11	RES-CHIP	150	5%	1/16W
R3047	1-218-943-11	RES-CHIP	150	5%	1/16W
R3048	1-218-943-11	RES-CHIP	150	5%	1/16W
R3049	1-218-943-11	RES-CHIP	150	5%	1/16W
R3050	1-218-943-11	RES-CHIP	150	5%	1/16W
R3051	1-218-943-11	RES-CHIP	150	5%	1/16W
R3052	1-218-990-11	SHORT CHIP			
R3053	1-218-943-11	RES-CHIP	150	5%	1/16W
R3054	1-218-937-11	RES-CHIP	47	5%	1/16W
R3055	1-218-990-11	SHORT CHIP			
R3056	1-218-937-11	RES-CHIP	47	5%	1/16W
R3057	1-218-941-81	RES-CHIP	100	5%	1/16W
R3058	1-218-937-11	RES-CHIP	47	5%	1/16W
R3059	1-218-948-11	RES-CHIP	390	5%	1/16W
R3060	1-218-939-11	RES-CHIP	68	5%	1/16W
R3061	1-218-929-11	RES-CHIP	10	5%	1/16W
R3062	1-218-949-11	RES-CHIP	470	5%	1/16W
R3063	1-218-937-11	RES-CHIP	47	5%	1/16W
R3064	1-208-679-11	METAL CHIP	680	0.50%	1/16W
R3065	1-208-679-11	METAL CHIP	680	0.50%	1/16W
R3066	1-208-683-11	METAL CHIP	1K	0.50%	1/16W
R3067	1-218-941-11	RES-CHIP	100	5%	1/16W
R3070	1-218-929-11	RES-CHIP	10	5%	1/16W
R3071	1-218-953-11	RES-CHIP	1K	5%	1/16W
R3072	1-218-937-11	RES-CHIP	47	5%	1/16W
R3073	1-218-937-11	RES-CHIP	47	5%	1/16W
R3074	1-218-937-11	RES-CHIP	47	5%	1/16W
R3076	1-208-675-11	METAL CHIP	470	0.50%	1/16W
R3077	1-218-957-11	RES-CHIP	2.2K	5%	1/16W
R3078	1-218-957-11	RES-CHIP	2.2K	5%	1/16W
R3079	1-208-679-11	METAL CHIP	680	0.50%	1/16W
R3080	1-208-679-11	METAL CHIP	680	0.50%	1/16W
R3081	1-218-948-11	RES-CHIP	390	5%	1/16W
R3082	1-208-675-11	METAL CHIP	470	0.50%	1/16W
R3083	1-218-948-11	RES-CHIP	390	5%	1/16W

B

REF. NO.	PART NO.	DESCRIPTION	VALUES		
R3084	1-208-675-11	METAL CHIP	470	0.50%	1/16W
R3085	1-208-683-11	METAL CHIP	1K	0.50%	1/16W
R3086	1-218-941-11	RES-CHIP	100	5%	1/16W
R3087	1-218-929-11	RES-CHIP	10	5%	1/16W
R3088	1-218-929-11	RES-CHIP	10	5%	1/16W
R3089	1-218-929-11	RES-CHIP	10	5%	1/16W
R3090	1-218-953-11	RES-CHIP	1K	5%	1/16W
R3091	1-218-953-11	RES-CHIP	1K	5%	1/16W
R3092	1-218-953-11	RES-CHIP	1K	5%	1/16W
R3093	1-218-929-11	RES-CHIP	10	5%	1/16W
R3094	1-218-929-11	RES-CHIP	10	5%	1/16W
R3095	1-208-893-11	METAL CHIP	1.8K	0.50%	1/16W
R3096	1-208-893-11	METAL CHIP	1.8K	0.50%	1/16W
R3097	1-218-929-11	RES-CHIP	10	5%	1/16W
R3098	1-218-929-11	RES-CHIP	10	5%	1/16W
R3100	1-218-990-11	SHORT CHIP			
R3102	1-218-990-11	SHORT CHIP			
R3103	1-218-990-11	SHORT CHIP			
R3104	1-218-990-11	SHORT CHIP			
R3106	1-218-990-11	SHORT CHIP			
R3107	1-218-959-11	RES-CHIP	3.3K	5%	1/16W
R3109	1-218-963-11	RES-CHIP	6.8K	5%	1/16W
R3110	1-218-990-11	SHORT CHIP			
R3111	1-218-943-11	RES-CHIP	150	5%	1/16W
R3112	1-218-947-11	RES-CHIP	330	5%	1/16W
R3113	1-220-174-11	RES-CHIP	200	5%	1/16W
R3114	1-220-174-11	RES-CHIP	200	5%	1/16W
R3115	1-218-953-11	RES-CHIP	1K	5%	1/16W
R3116	1-218-990-11	SHORT CHIP			
R3117	1-218-990-11	SHORT CHIP			
R3118	1-218-849-11	METAL CHIP	1.2K	0.50%	1/10W
R3119	1-208-679-11	METAL CHIP	680	0.50%	1/16W
R3120	1-208-893-11	METAL CHIP	1.8K	0.50%	1/16W
R3121	1-218-971-11	RES-CHIP	33K	5%	1/16W
R3122	1-208-893-11	METAL CHIP	1.8K	0.50%	1/16W
R3123	1-218-990-11	SHORT CHIP			
R3124	1-208-679-11	METAL CHIP	680	0.50%	1/16W
R3125	1-218-849-11	METAL CHIP	1.2K	0.50%	1/10W
R3128	1-218-943-11	RES-CHIP	150	5%	1/16W
R3129	1-218-947-11	RES-CHIP	330	5%	1/16W
R3130	1-220-174-11	RES-CHIP	200	5%	1/16W
R3135	1-220-174-11	RES-CHIP	200	5%	1/16W
R3136	1-218-953-11	RES-CHIP	1K	5%	1/16W
R3138	1-218-929-11	RES-CHIP	10	5%	1/16W
R3140	1-218-990-11	SHORT CHIP			
R3147	1-218-937-11	RES-CHIP	47	5%	1/16W
R3148	1-218-864-11	METAL CHIP	5.1K	0.50%	1/10W
R3149	1-208-683-11	METAL CHIP	1K	0.50%	1/16W
R3150	1-208-683-11	METAL CHIP	1K	0.50%	1/16W
R3151	1-208-671-11	METAL CHIP	330	0.50%	1/16W
R3152	1-218-937-11	RES-CHIP	47	5%	1/16W
R3153	1-208-687-11	METAL CHIP	1.5K	0.50%	1/16W
R3154	1-208-647-11	METAL CHIP	33	0.50%	1/16W
R3155	1-218-937-11	RES-CHIP	47	5%	1/16W
R3156	1-218-990-11	SHORT CHIP			
R3157	1-218-990-11	SHORT CHIP			
R3158	1-218-990-11	SHORT CHIP			
R3159	1-218-990-11	SHORT CHIP			
R3160	1-218-990-11	SHORT CHIP			
R3161	1-218-990-11	SHORT CHIP			
R3162	1-218-957-11	RES-CHIP	2.2K	5%	1/16W
R3163	1-218-957-11	RES-CHIP	2.2K	5%	1/16W
R3164	1-208-675-11	METAL CHIP	470	0.50%	1/16W
R3167	1-218-945-11	RES-CHIP	220	5%	1/16W
R3168	1-208-861-81	METAL CHIP	82	0.50%	1/16W
R3170	1-218-959-11	RES-CHIP	3.3K	5%	1/16W
R3171	1-218-941-81	RES-CHIP	100	5%	1/16W
R3172	1-218-955-11	RES-CHIP	1.5K	5%	1/16W
R3173	1-218-941-81	RES-CHIP	100	5%	1/16W
R3181	1-218-955-11	RES-CHIP	1.5K	5%	1/16W
R3182	1-218-937-11	RES-CHIP	47	5%	1/16W
R3187	1-218-990-11	SHORT CHIP			
R3188	1-218-949-11	RES-CHIP	470	5%	1/16W
R3191	1-218-965-11	RES-CHIP	10K	5%	1/16W
R3196	1-218-990-11	SHORT CHIP			
R3201	1-216-864-11	SHORT CHIP			
R3219	1-218-990-11	SHORT CHIP			
R3221	1-218-990-11	SHORT CHIP			
R3239	1-218-990-11	SHORT CHIP			
R3244	1-218-990-11	SHORT CHIP			
R3246	1-218-990-11	SHORT CHIP			
R3247	1-218-990-11	SHORT CHIP			
R3248	1-218-990-11	SHORT CHIP			
R3249	1-218-990-11	SHORT CHIP			
R3251	1-218-965-11	RES-CHIP	10K	5%	1/16W
R3252	1-218-945-11	RES-CHIP	220	5%	1/16W
R3253	1-218-990-11	SHORT CHIP			
R3255	1-216-801-11	METAL CHIP	22	5%	1/10W
R3256	1-208-898-81	METAL CHIP	3K	0.50%	1/16W
R3257	1-218-941-81	RES-CHIP	100	5%	1/16W
R3262	1-218-941-81	RES-CHIP	100	5%	1/16W
R3264	1-218-947-11	RES-CHIP	330	5%	1/16W
R3265	1-218-985-11	RES-CHIP	470K	5%	1/16W
R3266	1-218-969-11	RES-CHIP	22K	5%	1/16W
R3267	1-218-945-11	RES-CHIP	220	5%	1/16W
R3268	1-218-953-11	RES-CHIP	1K	5%	1/16W

B

REF. NO.	PART NO.	DESCRIPTION	VALUES		
R3269	1-218-985-11	RES-CHIP	470K	5%	1/16W
R3270	1-218-959-11	RES-CHIP	3.3K	5%	1/16W
R3272	1-216-805-11	METAL CHIP	47	5%	1/10W
R3276	1-543-949-22	FERRITE	0µH		
R3277	1-543-949-22	FERRITE	0µH		
R3284	1-218-935-11	RES-CHIP	33	5%	1/16W
R3285	1-218-942-11	RES-CHIP	120	5%	1/16W
R3286	1-218-942-11	RES-CHIP	120	5%	1/16W
R3288	1-218-990-11	SHORT CHIP			
R3301	1-218-937-11	RES-CHIP	47	5%	1/16W
R3302	1-218-937-11	RES-CHIP	47	5%	1/16W
R3303	1-218-967-11	RES-CHIP	15K	5%	1/16W
R3304	1-218-967-11	RES-CHIP	15K	5%	1/16W
R3306	1-216-820-11	METAL CHIP	820	5%	1/10W
R3309	1-216-821-11	METAL CHIP	1K	5%	1/10W
R3310	1-218-967-11	RES-CHIP	15K	5%	1/16W
R3311	1-216-855-11	METAL CHIP	680K	5%	1/10W
R3312	1-218-709-11	METAL CHIP	5.1K	0.50%	1/10W
R3313	1-216-855-11	METAL CHIP	680K	5%	1/10W
R3315	1-218-990-11	SHORT CHIP			
R3316	1-218-957-11	RES-CHIP	2.2K	5%	1/16W
R3317	1-218-945-11	RES-CHIP	220	5%	1/16W
R3318	1-218-941-81	RES-CHIP	100	5%	1/16W
R3319	1-216-841-11	METAL CHIP	47K	5%	1/10W
R3320	1-218-662-11	METAL CHIP	56	0.50%	1/10W
R3321	1-218-662-11	METAL CHIP	56	0.50%	1/10W
R3322	1-218-664-11	METAL CHIP	68	0.50%	1/10W
R3323	1-216-815-11	METAL CHIP	330	5%	1/10W
R3324	1-218-662-11	METAL CHIP	56	0.50%	1/10W
R3325	1-218-662-11	METAL CHIP	56	0.50%	1/10W
R3326	1-218-664-11	METAL CHIP	68	0.50%	1/10W
R3327	1-218-662-11	METAL CHIP	56	0.50%	1/10W
R3328	1-218-662-11	METAL CHIP	56	0.50%	1/10W
R3329	1-218-664-11	METAL CHIP	68	0.50%	1/10W
R3330	1-216-815-11	METAL CHIP	330	5%	1/10W
R3331	1-218-660-91	METAL CHIP	47	0.50%	1/10W
R3332	1-218-660-91	METAL CHIP	47	0.50%	1/10W
R3333	1-218-664-11	METAL CHIP	68	0.50%	1/10W
R3334	1-218-933-11	RES-CHIP	22	5%	1/16W
R3335	1-218-933-11	RES-CHIP	22	5%	1/16W
R3336	1-218-990-11	SHORT CHIP			
R3337	1-218-990-11	SHORT CHIP			
R3338	1-218-990-11	SHORT CHIP			
R3339	1-218-990-11	SHORT CHIP			
R3340	1-218-990-11	SHORT CHIP			
R3341	1-218-990-11	SHORT CHIP			
R3342	1-218-990-11	SHORT CHIP			
R3343	1-218-933-11	RES-CHIP	22	5%	1/16W

REF. NO.	PART NO.	DESCRIPTION	VALUES		
R3344	1-218-990-11	SHORT CHIP			
R3345	1-218-933-11	RES-CHIP	22	5%	1/16W
R3346	1-218-990-11	SHORT CHIP			
R3347	1-218-990-11	SHORT CHIP			
R3348	1-218-990-11	SHORT CHIP			
R3349	1-218-990-11	SHORT CHIP			
R3350	1-218-990-11	SHORT CHIP			
R3352	1-218-937-11	RES-CHIP	47	5%	1/16W
R3353	1-218-990-11	SHORT CHIP			
R3355	1-218-937-11	RES-CHIP	47	5%	1/16W
R3356	1-218-990-11	SHORT CHIP			
R3358	1-218-937-11	RES-CHIP	47	5%	1/16W
R3359	1-218-933-11	RES-CHIP	22	5%	1/16W
R3360	1-218-933-11	RES-CHIP	22	5%	1/16W
R3361	1-218-990-11	SHORT CHIP			
R3362	1-218-990-11	SHORT CHIP			
R3363	1-218-933-11	RES-CHIP	22	5%	1/16W
R3364	1-218-935-11	RES-CHIP	33	5%	1/16W
R3366	1-218-990-11	SHORT CHIP			
R3367	1-218-945-11	RES-CHIP	220	5%	1/16W
R3368	1-218-990-11	SHORT CHIP			
R3369	1-218-983-11	RES-CHIP	330K	5%	1/16W
R3370	1-218-990-11	SHORT CHIP			
R3371	1-218-937-11	RES-CHIP	47	5%	1/16W
R3372	1-218-937-11	RES-CHIP	47	5%	1/16W
R3373	1-218-933-11	RES-CHIP	22	5%	1/16W
R3374	1-218-990-11	SHORT CHIP			
R3375	1-218-933-11	RES-CHIP	22	5%	1/16W
R3376	1-218-990-11	SHORT CHIP			
R3377	1-218-990-11	SHORT CHIP			
R3378	1-218-990-11	SHORT CHIP			
R3379	1-218-990-11	SHORT CHIP			
R3380	1-218-965-11	RES-CHIP	10K	5%	1/16W
R3381	1-218-990-11	SHORT CHIP			
R3382	1-218-965-11	RES-CHIP	10K	5%	1/16W
R3383	1-218-965-11	RES-CHIP	10K	5%	1/16W
R3384	1-218-965-11	RES-CHIP	10K	5%	1/16W
R3385	1-218-990-11	SHORT CHIP			
R3387	1-218-939-11	RES-CHIP	68	5%	1/16W
R3388	1-218-939-11	RES-CHIP	68	5%	1/16W
R3389	1-218-939-11	RES-CHIP	68	5%	1/16W
R3390	1-218-939-11	RES-CHIP	68	5%	1/16W
R3391	1-218-939-11	RES-CHIP	68	5%	1/16W
R3392	1-218-939-11	RES-CHIP	68	5%	1/16W
R3394	1-218-939-11	RES-CHIP	68	5%	1/16W
R3395	1-218-939-11	RES-CHIP	68	5%	1/16W
R3396	1-218-939-11	RES-CHIP	68	5%	1/16W
R3397	1-218-939-11	RES-CHIP	68	5%	1/16W

B

REF. NO.	PART NO.	DESCRIPTION	VALUES		
R3398	1-218-939-11	RES-CHIP	68	5%	1/16W
R3399	1-218-939-11	RES-CHIP	68	5%	1/16W
R3400	1-218-939-11	RES-CHIP	68	5%	1/16W
R3401	1-218-929-11	RES-CHIP	10	5%	1/16W
R3402	1-218-937-11	RES-CHIP	47	5%	1/16W
R3403	1-218-937-11	RES-CHIP	47	5%	1/16W
R3404	1-218-937-11	RES-CHIP	47	5%	1/16W
R3411	1-208-675-11	METAL CHIP	470	0.50%	1/16W
R3412	1-208-675-11	METAL CHIP	470	0.50%	1/16W
R3413	1-208-675-11	METAL CHIP	470	0.50%	1/16W
R3414	1-208-675-11	METAL CHIP	470	0.50%	1/16W
R3415	1-208-675-11	METAL CHIP	470	0.50%	1/16W
R3416	1-208-675-11	METAL CHIP	470	0.50%	1/16W
R3417	1-218-929-11	RES-CHIP	10	5%	1/16W
R3418	1-218-929-11	RES-CHIP	10	5%	1/16W
R3419	1-218-929-11	RES-CHIP	10	5%	1/16W
R3420	1-218-953-11	RES-CHIP	1K	5%	1/16W
R3421	1-218-953-11	RES-CHIP	1K	5%	1/16W
R3422	1-218-953-11	RES-CHIP	1K	5%	1/16W
R3424	1-218-937-11	RES-CHIP	47	5%	1/16W
R3427	1-218-990-11	SHORT CHIP			
R3429	1-218-941-81	RES-CHIP	100	5%	1/16W
R3430	1-208-687-11	METAL CHIP	1.5K	0.50%	1/16W
R3431	1-208-683-11	METAL CHIP	1K	0.50%	1/16W
R3432	1-208-911-11	METAL CHIP	10K	0.50%	1/16W
R3501	1-218-937-11	RES-CHIP	47	5%	1/16W
R3503	1-218-965-11	RES-CHIP	10K	5%	1/16W
R3504	1-218-933-11	RES-CHIP	22	5%	1/16W
R3505	1-218-953-11	RES-CHIP	1K	5%	1/16W
R3507	1-218-990-11	SHORT CHIP			
R3508	1-218-933-11	RES-CHIP	22	5%	1/16W
R3509	1-218-933-11	RES-CHIP	22	5%	1/16W
R3510	1-218-937-11	RES-CHIP	47	5%	1/16W
R3511	1-216-805-11	METAL CHIP	47	5%	1/10W
R3512	1-218-937-11	RES-CHIP	47	5%	1/16W
R3513	1-218-937-11	RES-CHIP	47	5%	1/16W
R3514	1-216-805-11	METAL CHIP	47	5%	1/10W
R3515	1-218-937-11	RES-CHIP	47	5%	1/16W
R3516	1-218-937-11	RES-CHIP	47	5%	1/16W
R3517	1-218-937-11	RES-CHIP	47	5%	1/16W
R3518	1-218-937-11	RES-CHIP	47	5%	1/16W
R3520	1-216-805-11	METAL CHIP	47	5%	1/10W
R3522	1-218-990-11	SHORT CHIP			
R3523	1-218-939-11	RES-CHIP	68	5%	1/16W
R3524	1-218-939-11	RES-CHIP	68	5%	1/16W
R3525	1-218-990-11	SHORT CHIP			
R3527	1-218-990-11	SHORT CHIP			
R3528	1-218-977-11	RES-CHIP	100K	5%	1/16W
R3529	1-218-977-11	RES-CHIP	100K	5%	1/16W
R3531	1-218-939-11	RES-CHIP	68	5%	1/16W
R3532	1-216-864-11	SHORT CHIP			
R3533	1-216-864-11	SHORT CHIP			
R3534	1-216-864-11	SHORT CHIP			
R3535	1-218-941-11	RES-CHIP	100	5%	1/16W
R3536	1-218-941-11	RES-CHIP	100	5%	1/16W
R3537	1-218-941-11	RES-CHIP	100	5%	1/16W
R3538	1-218-941-11	RES-CHIP	100	5%	1/16W
R3539	1-218-941-11	RES-CHIP	100	5%	1/16W
R3540	1-218-941-11	RES-CHIP	100	5%	1/16W
R3544	1-218-965-11	RES-CHIP	10K	5%	1/16W
R3545	1-218-965-11	RES-CHIP	10K	5%	1/16W
R3546	1-218-965-11	RES-CHIP	10K	5%	1/16W
R3547	1-218-965-11	RES-CHIP	10K	5%	1/16W
R3548	1-218-965-11	RES-CHIP	10K	5%	1/16W
R3605	1-218-973-11	RES-CHIP	47K	5%	1/16W
R3606	1-218-941-81	RES-CHIP	100	5%	1/16W
R3607	1-216-864-11	SHORT CHIP			
R3608	1-218-985-11	RES-CHIP	470K	5%	1/16W
R3609	1-218-941-81	RES-CHIP	100	5%	1/16W
R3614	1-218-973-11	RES-CHIP	47K	5%	1/16W
R3615	1-218-937-11	RES-CHIP	47	5%	1/16W
R3616	1-218-937-11	RES-CHIP	47	5%	1/16W
R3617	1-218-937-11	RES-CHIP	47	5%	1/16W
R3619	1-218-965-11	RES-CHIP	10K	5%	1/16W
R3620	1-218-937-11	RES-CHIP	47	5%	1/16W
R3621	1-218-955-11	RES-CHIP	1.5K	5%	1/16W
R3622	1-218-937-11	RES-CHIP	47	5%	1/16W
R3624	1-218-937-11	RES-CHIP	47	5%	1/16W
R3625	1-218-933-11	RES-CHIP	22	5%	1/16W
R3628	1-218-965-11	RES-CHIP	10K	5%	1/16W
R3629	1-218-965-11	RES-CHIP	10K	5%	1/16W
R3630	1-218-937-11	RES-CHIP	47	5%	1/16W
R3631	1-218-937-11	RES-CHIP	47	5%	1/16W
R3632	1-218-937-11	RES-CHIP	47	5%	1/16W
R3633	1-218-937-11	RES-CHIP	47	5%	1/16W
R3634	1-218-965-11	RES-CHIP	10K	5%	1/16W
R3636	1-218-965-11	RES-CHIP	10K	5%	1/16W
R3637	1-218-941-81	RES-CHIP	100	5%	1/16W
R3638	1-218-971-11	RES-CHIP	33K	5%	1/16W
R3639	1-218-937-11	RES-CHIP	47	5%	1/16W
R3640	1-218-937-11	RES-CHIP	47	5%	1/16W
R3641	1-218-977-11	RES-CHIP	100K	5%	1/16W
R3642	1-218-973-11	RES-CHIP	47K	5%	1/16W
R3643	1-218-941-81	RES-CHIP	100	5%	1/16W
R3644	1-218-941-81	RES-CHIP	100	5%	1/16W
R3645	1-218-965-11	RES-CHIP	10K	5%	1/16W

B

REF. NO.	PART NO.	DESCRIPTION	VALUES		
R3646	1-218-941-81	RES-CHIP	100	5%	1/16W
R3647	1-218-937-11	RES-CHIP	47	5%	1/16W
R3648	1-218-937-11	RES-CHIP	47	5%	1/16W
R3649	1-218-965-11	RES-CHIP	10K	5%	1/16W
R3650	1-208-699-11	METAL CHIP	4.7K	0.50%	1/16W
R3651	1-218-937-11	RES-CHIP	47	5%	1/16W
R3652	1-208-699-11	METAL CHIP	4.7K	0.50%	1/16W
R3653	1-218-965-11	RES-CHIP	10K	5%	1/16W
R3655	1-218-937-11	RES-CHIP	47	5%	1/16W
R3657	1-218-983-11	RES-CHIP	330K	5%	1/16W
R3658	1-218-941-81	RES-CHIP	100	5%	1/16W
R3660	1-219-570-11	METAL CHIP	10M	5%	1/10W
R3661	1-218-979-11	RES-CHIP	150K	5%	1/16W
R3662	1-218-969-11	RES-CHIP	22K	5%	1/16W
R3663	1-218-965-11	RES-CHIP	10K	5%	1/16W
R3664	1-218-965-11	RES-CHIP	10K	5%	1/16W
R3665	1-218-965-11	RES-CHIP	10K	5%	1/16W
R3666	1-218-937-11	RES-CHIP	47	5%	1/16W
R3667	1-218-971-11	RES-CHIP	33K	5%	1/16W
R3668	1-218-953-11	RES-CHIP	1K	5%	1/16W
R3670	1-218-941-81	RES-CHIP	100	5%	1/16W
R3671	1-218-990-11	SHORT CHIP			
R3672	1-218-977-11	RES-CHIP	100K	5%	1/16W
R3673	1-218-937-11	RES-CHIP	47	5%	1/16W
R3674	1-218-937-11	RES-CHIP	47	5%	1/16W
R3675	1-218-953-11	RES-CHIP	1K	5%	1/16W
R3676	1-218-973-11	RES-CHIP	47K	5%	1/16W
R3677	1-218-941-81	RES-CHIP	100	5%	1/16W
R3678	1-218-965-11	RES-CHIP	10K	5%	1/16W
R3679	1-218-929-11	RES-CHIP	10	5%	1/16W
R3680	1-218-929-11	RES-CHIP	10	5%	1/16W
R3681	1-218-929-11	RES-CHIP	10	5%	1/16W
R3682	1-218-929-11	RES-CHIP	10	5%	1/16W
R3683	1-218-965-11	RES-CHIP	10K	5%	1/16W
R3684	1-218-965-11	RES-CHIP	10K	5%	1/16W
R3685	1-218-953-11	RES-CHIP	1K	5%	1/16W
R3686	1-218-953-11	RES-CHIP	1K	5%	1/16W
R3687	1-218-941-81	RES-CHIP	100	5%	1/16W
R3688	1-218-941-81	RES-CHIP	100	5%	1/16W
R3689	1-218-937-11	RES-CHIP	47	5%	1/16W
R3690	1-218-941-81	RES-CHIP	100	5%	1/16W
R3691	1-218-941-81	RES-CHIP	100	5%	1/16W
R3692	1-218-941-81	RES-CHIP	100	5%	1/16W
R3694	1-218-937-11	RES-CHIP	47	5%	1/16W
R3695	1-218-941-81	RES-CHIP	100	5%	1/16W
R3696	1-218-937-11	RES-CHIP	47	5%	1/16W
R3697	1-218-937-11	RES-CHIP	47	5%	1/16W
R3698	1-218-941-81	RES-CHIP	100	5%	1/16W

REF. NO.	PART NO.	DESCRIPTION	VALUES		
R3699	1-218-953-11	RES-CHIP	1K	5%	1/16W
R3700	1-218-973-11	RES-CHIP	47K	5%	1/16W
R3701	1-220-804-11	RES-CHIP	2.2M	5%	1/16W
R3702	1-218-969-11	RES-CHIP	22K	5%	1/16W
R3703	1-218-937-11	RES-CHIP	47	5%	1/16W
R3704	1-218-937-11	RES-CHIP	47	5%	1/16W
R3705	1-218-949-11	RES-CHIP	470	5%	1/16W
R3706	1-218-937-11	RES-CHIP	47	5%	1/16W
R3707	1-218-990-11	SHORT CHIP			
R3709	1-218-965-11	RES-CHIP	10K	5%	1/16W
R3710	1-218-969-11	RES-CHIP	22K	5%	1/16W
R3712	1-218-969-11	RES-CHIP	22K	5%	1/16W
R3713	1-218-990-11	SHORT CHIP			
R3714	1-218-965-11	RES-CHIP	10K	5%	1/16W
R3716	1-218-957-11	RES-CHIP	2.2K	5%	1/16W
R3718	1-218-965-11	RES-CHIP	10K	5%	1/16W
R3719	1-218-965-11	RES-CHIP	10K	5%	1/16W
R3723	1-218-990-11	SHORT CHIP			
R3724	1-218-961-11	RES-CHIP	4.7K	5%	1/16W
R3725	1-218-973-11	RES-CHIP	47K	5%	1/16W
R3726	1-218-971-11	RES-CHIP	33K	5%	1/16W
R3727	1-218-965-11	RES-CHIP	10K	5%	1/16W
R3728	1-218-949-11	RES-CHIP	470	5%	1/16W
R3729	1-218-937-11	RES-CHIP	47	5%	1/16W
R3730	1-218-941-81	RES-CHIP	100	5%	1/16W
R3731	1-218-990-11	SHORT CHIP			
R3733	1-218-990-11	SHORT CHIP			
R3734	1-218-990-11	SHORT CHIP			
R3735	1-218-965-11	RES-CHIP	10K	5%	1/16W
R3736	1-218-965-11	RES-CHIP	10K	5%	1/16W
R3738	1-218-965-11	RES-CHIP	10K	5%	1/16W
R3739	1-218-990-11	SHORT CHIP			
R3740	1-218-990-11	SHORT CHIP			
R3741	1-218-990-11	SHORT CHIP			
R3742	1-218-956-11	RES-CHIP	1.8K	5%	1/16W
R3744	1-218-956-11	RES-CHIP	1.8K	5%	1/16W
R3745	1-218-937-11	RES-CHIP	47	5%	1/16W
R3746	1-218-937-11	RES-CHIP	47	5%	1/16W
R3747	1-218-937-11	RES-CHIP	47	5%	1/16W
R3748	1-218-937-11	RES-CHIP	47	5%	1/16W
R3749	1-218-953-11	RES-CHIP	1K	5%	1/16W
R3750	1-218-953-11	RES-CHIP	1K	5%	1/16W
R3751	1-218-953-11	RES-CHIP	1K	5%	1/16W
R3752	1-218-953-11	RES-CHIP	1K	5%	1/16W
R3753	1-218-989-11	RES-CHIP	1M	5%	1/16W
R3754	1-218-989-11	RES-CHIP	1M	5%	1/16W
R3755	1-218-957-11	RES-CHIP	2.2K	5%	1/16W
R3756	1-218-957-11	RES-CHIP	2.2K	5%	1/16W

B

REF. NO.	PART NO.	DESCRIPTION	VALUES		
R3757	1-208-711-11	METAL CHIP	15K	0.50%	1/16W
R3758	1-208-711-11	METAL CHIP	15K	0.50%	1/16W
R3759	1-208-699-11	METAL CHIP	4.7K	0.50%	1/16W
R3760	1-208-699-11	METAL CHIP	4.7K	0.50%	1/16W
R3761	1-218-957-11	RES-CHIP	2.2K	5%	1/16W
R3762	1-218-957-11	RES-CHIP	2.2K	5%	1/16W
R3763	1-218-937-11	RES-CHIP	47	5%	1/16W
R3764	1-218-937-11	RES-CHIP	47	5%	1/16W
R3765	1-218-849-11	METAL CHIP	1.2K	0.50%	1/10W
R3766	1-216-296-11	SHORT CHIP			
R3767	1-216-296-11	SHORT CHIP			
R3768	1-216-296-11	SHORT CHIP			
R3769	1-216-296-11	SHORT CHIP			
R3770	1-216-296-11	SHORT CHIP			
R3771	1-218-990-11	SHORT CHIP			
R3772	1-218-990-11	SHORT CHIP			
R3773	1-218-990-11	SHORT CHIP			
R3774	1-218-941-81	RES-CHIP	100	5%	1/16W
R3775	1-218-849-11	METAL CHIP	1.2K	0.50%	1/10W
R3776	1-218-849-11	METAL CHIP	1.2K	0.50%	1/10W
R3777	1-218-990-11	SHORT CHIP			
R3778	1-218-990-11	SHORT CHIP			
R3779	1-218-990-11	SHORT CHIP			
R3780	1-218-937-11	RES-CHIP	47	5%	1/16W
R3781	1-218-937-11	RES-CHIP	47	5%	1/16W
R3783	1-218-965-11	RES-CHIP	10K	5%	1/16W
R3784	1-218-945-11	RES-CHIP	220	5%	1/16W
R3785	1-218-945-11	RES-CHIP	220	5%	1/16W
R3786	1-218-945-11	RES-CHIP	220	5%	1/16W
R3792	1-218-990-11	SHORT CHIP			
R3793	1-208-929-11	METAL CHIP	56K	0.50%	1/16W
R3794	1-208-929-11	METAL CHIP	56K	0.50%	1/16W
R3801	1-218-965-11	RES-CHIP	10K	5%	1/16W
R3802	1-218-965-11	RES-CHIP	10K	5%	1/16W
R3805	1-218-965-11	RES-CHIP	10K	5%	1/16W
R3806	1-218-965-11	RES-CHIP	10K	5%	1/16W
R3808	1-218-937-11	RES-CHIP	47	5%	1/16W
R3809	1-218-937-11	RES-CHIP	47	5%	1/16W
R3810	1-218-937-11	RES-CHIP	47	5%	1/16W
R3811	1-218-937-11	RES-CHIP	47	5%	1/16W
R3812	1-218-937-11	RES-CHIP	47	5%	1/16W
R3815	1-218-941-81	RES-CHIP	100	5%	1/16W
R3816	1-218-941-81	RES-CHIP	100	5%	1/16W
R3817	1-218-939-11	RES-CHIP	68	5%	1/16W
R3821	1-218-953-11	RES-CHIP	1K	5%	1/16W
R3822	1-218-965-11	RES-CHIP	10K	5%	1/16W
R3823	1-218-941-81	RES-CHIP	100	5%	1/16W
R3824	1-218-965-11	RES-CHIP	10K	5%	1/16W
R3825	1-218-933-11	RES-CHIP	22	5%	1/16W
R3826	1-218-933-11	RES-CHIP	22	5%	1/16W
R3828	1-218-965-11	RES-CHIP	10K	5%	1/16W
R3829	1-218-965-11	RES-CHIP	10K	5%	1/16W
R3830	1-218-965-11	RES-CHIP	10K	5%	1/16W
R3831	1-218-959-11	RES-CHIP	3.3K	5%	1/16W
R3832	1-218-959-11	RES-CHIP	3.3K	5%	1/16W
R3833	1-218-965-11	RES-CHIP	10K	5%	1/16W
R3834	1-218-965-11	RES-CHIP	10K	5%	1/16W
R3835	1-218-973-11	RES-CHIP	47K	5%	1/16W
R3836	1-218-965-11	RES-CHIP	10K	5%	1/16W
R3837	1-218-961-11	RES-CHIP	4.7K	5%	1/16W
R3838	1-218-941-81	RES-CHIP	100	5%	1/16W
R3839	1-218-941-81	RES-CHIP	100	5%	1/16W
R3841	1-218-941-81	RES-CHIP	100	5%	1/16W
R3842	1-218-941-81	RES-CHIP	100	5%	1/16W
R3843	1-218-941-81	RES-CHIP	100	5%	1/16W
R3844	1-218-941-81	RES-CHIP	100	5%	1/16W
R3845	1-218-933-11	RES-CHIP	22	5%	1/16W
R3846	1-218-933-11	RES-CHIP	22	5%	1/16W
R3847	1-218-965-11	RES-CHIP	10K	5%	1/16W
R3848	1-218-965-11	RES-CHIP	10K	5%	1/16W
R3849	1-218-965-11	RES-CHIP	10K	5%	1/16W
R3850	1-218-990-11	SHORT CHIP			
R3851	1-218-990-11	SHORT CHIP			
R3852	1-218-990-11	SHORT CHIP			
R3853	1-218-990-11	SHORT CHIP			
R3854	1-218-990-11	SHORT CHIP			
R3855	1-218-990-11	SHORT CHIP			
R3856	1-218-990-11	SHORT CHIP			
R3857	1-218-990-11	SHORT CHIP			
R3858	1-218-990-11	SHORT CHIP			
R3859	1-218-990-11	SHORT CHIP			
R3860	1-218-973-11	RES-CHIP	47K	5%	1/16W
R3861	1-218-965-11	RES-CHIP	10K	5%	1/16W
R3863	1-218-941-81	RES-CHIP	100	5%	1/16W
R3864	1-218-937-11	RES-CHIP	47	5%	1/16W
R3865	1-218-941-81	RES-CHIP	100	5%	1/16W
R3866	1-218-965-11	RES-CHIP	10K	5%	1/16W
R3867	1-218-965-11	RES-CHIP	10K	5%	1/16W
R3868	1-218-957-11	RES-CHIP	2.2K	5%	1/16W
R3869	1-218-941-81	RES-CHIP	100	5%	1/16W
R3872	1-218-990-11	SHORT CHIP			
R3873	1-218-990-11	SHORT CHIP			

B H3

REF. NO.	PART NO.	DESCRIPTION	VALUES
	RESISTOR BRIDGE		
RB3001	1-234-378-21	RES, NETWORK 10K	(1005X4)
RB3002	1-234-378-21	RES, NETWORK 10K	(1005X4)
RB3003	1-234-378-21	RES, NETWORK 10K	(1005X4)
RB3004	1-234-378-21	RES, NETWORK 10K	(1005X4)
RB3005	1-234-378-21	RES, NETWORK 10K	(1005X4)
RB3006	1-234-378-21	RES, NETWORK 10K	(1005X4)
RB3007	1-234-371-21	RES, NETWORK 47	(1005X4)
RB3008	1-234-371-21	RES, NETWORK 47	(1005X4)
RB3009	1-234-371-21	RES, NETWORK 47	(1005X4)
RB3010	1-234-371-21	RES, NETWORK 47	(1005X4)
RB3011	1-234-378-21	RES, NETWORK 10K	(1005X4)
RB3012	1-234-378-21	RES, NETWORK 10K	(1005X4)
RB3013	1-234-378-21	RES, NETWORK 10K	(1005X4)
RB3014	1-234-378-21	RES, NETWORK 10K	(1005X4)
RB3015	1-234-378-21	RES, NETWORK 10K	(1005X4)
RB3016	1-234-372-21	RES, NETWORK 100	(1005X4)
RB3017	1-234-372-21	RES, NETWORK 100	(1005X4)
RB3021	1-234-372-21	RES, NETWORK 100	(1005X4)
RB3022	1-234-372-21	RES, NETWORK 100	(1005X4)
RB3201	1-234-371-21	RES, NETWORK 47	(1005X4)
RB3202	1-234-371-21	RES, NETWORK 47	(1005X4)
RB3203	1-234-371-21	RES, NETWORK 47	(1005X4)
RB3204	1-234-371-21	RES, NETWORK 47	(1005X4)
RB3205	1-234-372-21	RES, NETWORK 100	(1005X4)
RB3206	1-234-372-21	RES, NETWORK 100	(1005X4)
RB3207	1-234-372-21	RES, NETWORK 100	(1005X4)
RB3208	1-234-372-21	RES, NETWORK 100	(1005X4)
RB3301	1-234-371-21	RES, NETWORK 47	(1005X4)
RB3302	1-234-371-21	RES, NETWORK 47	(1005X4)
RB3303	1-234-371-21	RES, NETWORK 47	(1005X4)
RB3304	1-234-371-21	RES, NETWORK 47	(1005X4)
RB3305	1-234-370-21	RES, NETWORK 22	(1005X4)
RB3306	1-234-370-21	RES, NETWORK 22	(1005X4)
RB3307	1-234-370-21	RES, NETWORK 22	(1005X4)
RB3308	1-234-370-21	RES, NETWORK 22	(1005X4)
RB3309	1-234-378-21	RES, NETWORK 10K	(1005X4)
RB3310	1-234-378-21	RES, NETWORK 10K	(1005X4)
RB3311	1-234-378-21	RES, NETWORK 10K	(1005X4)
RB3312	1-234-378-21	RES, NETWORK 10K	(1005X4)
RB3313	1-234-378-21	RES, NETWORK 10K	(1005X4)
RB3314	1-234-378-21	RES, NETWORK 10K	(1005X4)
RB3315	1-234-702-11	RES, NETWORK 68	(1005X4)
RB3316	1-234-702-11	RES, NETWORK 68	(1005X4)
RB3501	1-234-371-21	RES, NETWORK 47	(1005X4)
RB3502	1-234-371-21	RES, NETWORK 47	(1005X4)
RB3503	1-234-371-21	RES, NETWORK 47	(1005X4)
RB3504	1-234-371-21	RES, NETWORK 47	(1005X4)
RB3505	1-234-371-21	RES, NETWORK 47	(1005X4)
RB3506	1-234-371-21	RES, NETWORK 47	(1005X4)
RB3507	1-234-371-21	RES, NETWORK 47	(1005X4)
RB3508	1-234-702-11	RES, NETWORK 68	(1005X4)
RB3509	1-234-702-11	RES, NETWORK 68	(1005X4)
RB3510	1-234-702-11	RES, NETWORK 68	(1005X4)
RB3511	1-234-702-11	RES, NETWORK 68	(1005X4)
RB3512	1-234-702-11	RES, NETWORK 68	(1005X4)
RB3513	1-234-702-11	RES, NETWORK 68	(1005X4)
RB3601	1-234-378-21	RES, NETWORK 10K	(1005X4)
RB3602	1-234-371-21	RES, NETWORK 47	(1005X4)
RB3603	1-234-371-21	RES, NETWORK 47	(1005X4)
RB3604	1-234-371-21	RES, NETWORK 47	(1005X4)
RB3605	1-234-371-21	RES, NETWORK 47	(1005X4)
RB3606	1-234-371-21	RES, NETWORK 47	(1005X4)
	CRYSTAL		
X3301	1-813-114-21	VIBRATOR, CRYSTAL	
X3302	1-813-373-11	OSCILLATOR, CRYSTAL	
X3501	1-795-739-22	CRYSTAL OSCILLATOR (SMD)	
X3601	1-795-753-21	VIBRATOR, CERAMIC	
X3602	1-781-696-21	VIBRATOR, CRYSTAL	
X3603	1-813-113-11	VIBRATOR, CRYSTAL	
X3801	1-813-095-11	VIBRATOR, CRYSTAL	

H3

*	**A-1054-669-A**	**H3 BOARD, MOUNTED**			
	CAPACITOR				
C41	1-162-964-11	CERAMIC CHIP	0.001µF	10%	50V
C42	1-162-964-11	CERAMIC CHIP	0.001µF	10%	50V
C44	1-162-919-11	CERAMIC CHIP	22pF	5%	50V
C45	1-162-919-11	CERAMIC CHIP	22pF	5%	50V
C50	1-126-964-11	ELECT	10µF	20%	50V
C51	1-126-964-11	ELECT	10µF	20%	50V
C52	1-126-964-11	ELECT	10µF	20%	50V
C53	1-126-964-11	ELECT	10µF	20%	50V
C58	1-126-933-11	ELECT	100µF	20%	16V
C59	1-164-156-11	CERAMIC CHIP	0.1µF		25V
C70	1-162-974-11	CERAMIC CHIP	0.01µF		50V
C72	1-115-156-11	CERAMIC CHIP	1µF		10V
C77	1-162-970-11	CERAMIC CHIP	0.01µF	10%	25V

H3 T HM

REF. NO.	PART NO.	DESCRIPTION	VALUES		
	CONNECTOR				
CN43	1-564-528-11	PLUG, CONNECTOR	13P		
* CN44	1-564-509-11	PLUG, CONNECTOR	6P		
	IC				
IC41	8-759-442-07	IC	LM75CIMX-5		
	JACK				
J40	1-770-053-12	TERMINAL BLOCK, S(LIGHT ANGLE)			
	RESISTOR				
R41	1-216-864-11	SHORT CHIP			
R42	1-216-864-11	SHORT CHIP			
R43	1-216-821-11	METAL CHIP	1K	5%	1/10W
R44	1-216-821-11	METAL CHIP	1K	5%	1/10W
R45	1-216-864-11	SHORT CHIP			
R46	1-216-849-11	METAL CHIP	220K	5%	1/10W
R47	1-216-849-11	METAL CHIP	220K	5%	1/10W
R48	1-218-665-11	METAL CHIP	75	0.50%	1/10W
R49	1-216-801-11	METAL CHIP	22	5%	1/10W
R50	1-218-665-11	METAL CHIP	75	0.50%	1/10W
R51	1-216-801-11	METAL CHIP	22	5%	1/10W
R54	1-216-864-11	SHORT CHIP			
R55	1-216-864-11	SHORT CHIP			
R57	1-216-864-11	SHORT CHIP			
R59	1-216-864-11	SHORT CHIP			
R60	1-216-864-11	SHORT CHIP			
R75	1-216-821-11	METAL CHIP	1K	5%	1/10W
R89	1-218-665-11	METAL CHIP	75	0.50%	1/10W
	VARISTOR				
VD40	1-803-974-21	VARISTOR, CHIP	(1608)		
VD41	1-803-974-21	VARISTOR, CHIP	(1608)		
VD42	1-803-974-21	VARISTOR, CHIP	(1608)		
VD43	1-803-974-21	VARISTOR, CHIP	(1608)		
VD44	1-803-974-21	VARISTOR, CHIP	(1608)		

T

REF. NO.	PART NO.	DESCRIPTION	VALUES		
*	**A-1054-670-A**	**T BOARD, MOUNTED**			
	CONNECTOR				
* CN8001	1-564-518-11	PLUG, CONNECTOR	3P		
	SWITCH				
S8001	1-570-245-11	SWITCH, MICRO			

HM

REF. NO.	PART NO.	DESCRIPTION	VALUES		
*	**A-1060-184-A**	**HM BOARD, COMPLETE**			
	CAPACITOR				
C7203	1-162-910-11	CERAMIC CHIP	5pF	0.25pF	50V
C7204	1-162-911-11	CERAMIC CHIP	6pF	0.50pF	50V
C7205	1-162-970-11	CERAMIC CHIP	0.01µF	10%	25V
C7206	1-162-970-11	CERAMIC CHIP	0.01µF	10%	25V
C7207	1-107-826-11	CERAMIC CHIP	0.1µF	10%	16V
C7208	1-162-970-11	CERAMIC CHIP	0.01µF	10%	25V
C7209	1-125-837-91	CERAMIC CHIP	1µF	10%	6.3V
C7210	1-107-826-11	CERAMIC CHIP	0.1µF	10%	16V
C7211	1-127-760-11	CERAMIC CHIP	4.7µF	10%	6.3V
C7212	1-125-837-91	CERAMIC CHIP	1µF	10%	6.3V
C7213	1-162-970-11	CERAMIC CHIP	0.01µF	10%	25V
C7215	1-164-156-11	CERAMIC CHIP	0.1µF		25V
C7216	1-162-970-11	CERAMIC CHIP	0.01µF	10%	25V
C7217	1-125-837-91	CERAMIC CHIP	1µF	10%	6.3V
C7218	1-164-156-11	CERAMIC CHIP	0.1µF		25V
C7219	1-164-156-11	CERAMIC CHIP	0.1µF		25V
C7220	1-164-156-11	CERAMIC CHIP	0.1µF		25V
C7221	1-164-156-11	CERAMIC CHIP	0.1µF		25V
C7224	1-164-156-11	CERAMIC CHIP	0.1µF		25V
C7225	1-127-692-11	CERAMIC CHIP	10µF	10%	16V
C7226	1-164-156-11	CERAMIC CHIP	0.1µF		25V
C7227	1-107-826-11	CERAMIC CHIP	0.1µF	10%	16V
C7228	1-127-692-11	CERAMIC CHIP	10µF	10%	16V
	CONNECTOR				
* CN7201	1-784-010-11	CONNECTOR, USB (B)			
CN7204	1-817-653-11	MEMORY STICK CONNECTOR			
* CN7205	1-564-508-11	PLUG, CONNECTOR	5P		

HM H2

REF. NO.	PART NO.	DESCRIPTION	VALUES		
	DIODE				
D7201	8-719-800-76	DIODE	1SS226		
D7202	8-719-083-58	DIODE	UDZSTE-173.9B		
D7210	6-500-182-01	DIODE	L-1503CB/1ID-F01		
D7212	8-719-083-58	DIODE	UDZSTE-173.9B		
	FERRITE BEAD				
FB7201	1-414-921-11	FERRITE	0µH		
FB7202	1-414-921-11	FERRITE	0µH		
FB7203	1-414-921-11	FERRITE	0µH		
FB7204	1-414-921-11	FERRITE	0µH		
	IC				
IC7201	6-703-076-01	IC	XC6204B332MR		
IC7202	6-704-548-01	IC	90C36LC1B-LF		
IC7203	6-704-067-01	IC	M24128-BWMN6T(A)		
IC7204	6-704-532-01	IC	RPM7240-H5		
IC7205	6-706-481-01	IC	TC7SET32FU(T5RSOJF)		
	COIL				
L7201	1-414-394-11	INDUCTOR	2.2µH		
	TRANSISTOR				
Q7201	8-729-424-02	TRANSISTOR	2SB709A-QRS-TX		
Q7202	8-729-422-27	TRANSISTOR	2SD601A-Q		
	RESISTOR				
R7201	1-216-864-11	SHORT CHIP			
R7202	1-414-228-11	FERRITE	0µH		
R7203	1-216-837-11	METAL CHIP	22K	5%	1/10W
R7204	1-216-809-11	METAL CHIP	100	5%	1/10W
R7206	1-216-857-11	METAL CHIP	1M	5%	1/10W
R7209	1-414-228-11	FERRITE	0µH		
R7210	1-216-803-11	METAL CHIP	33	5%	1/10W
R7211	1-216-821-11	METAL CHIP	1K	5%	1/10W
R7212	1-216-803-11	METAL CHIP	33	5%	1/10W
R7214	1-216-823-11	METAL CHIP	1.5K	5%	1/10W
R7215	1-414-228-11	FERRITE	0µH		
R7216	1-216-821-11	METAL CHIP	1K	5%	1/10W
R7217	1-216-821-11	METAL CHIP	1K	5%	1/10W
R7218	1-216-829-11	METAL CHIP	4.7K	5%	1/10W
R7219	1-216-817-11	METAL CHIP	470	5%	1/10W

REF. NO.	PART NO.	DESCRIPTION	VALUES		
R7221	1-216-821-11	METAL CHIP	1K	5%	1/10W
R7222	1-216-811-11	METAL CHIP	150	5%	1/10W
R7223	1-216-809-11	METAL CHIP	100	5%	1/10W
R7224	1-216-809-11	METAL CHIP	100	5%	1/10W
R7225	1-216-809-11	METAL CHIP	100	5%	1/10W
R7226	1-216-864-11	SHORT CHIP			
R7227	1-216-864-11	SHORT CHIP			
R7228	1-216-864-11	SHORT CHIP			
R7229	1-216-821-11	METAL CHIP	1K	5%	1/10W
R7231	1-216-825-11	METAL CHIP	2.2K	5%	1/10W
R7232	1-216-805-11	METAL CHIP	47	5%	1/10W
R7233	1-216-837-11	METAL CHIP	22K	5%	1/10W
R7234	1-216-809-11	METAL CHIP	100	5%	1/10W
R7235	1-216-864-11	SHORT CHIP			
R7236	1-216-809-11	METAL CHIP	100	5%	1/10W
	CRYSTAL				
X7201	1-760-965-21	VIBRATOR, CRYSTAL			

H2

*	**A-1054-668-A**	**H2 BOARD, MOUNTED**		
	CAPACITOR			
	C4501	1-164-156-11	CERAMIC CHIP	0.1µF	25V
	C4503	1-162-974-11	CERAMIC CHIP	0.01µF	50V
	C4505	1-162-974-11	CERAMIC CHIP	0.01µF	50V
	C4506	1-162-974-11	CERAMIC CHIP	0.01µF	50V
	C4507	1-162-974-11	CERAMIC CHIP	0.01µF	50V
	C4508	1-162-974-11	CERAMIC CHIP	0.01µF	50V
	CONNECTOR			
*	CN4502	1-695-223-21	PIN, CONNECTOR (SMD) 10P	
	DIODE			
	D4503	8-719-053-43	DIODE	SLR-325VCT31
	D4504	8-719-064-11	DIODE	SPR-325MVW
	D4510	8-719-053-43	DIODE	SLR-325VCT31
	TRANSISTOR			
	Q4503	8-729-422-33	TRANSISTOR	2SD601A-Q-TX
	Q4504	8-729-422-33	TRANSISTOR	2SD601A-Q-TX
	Q4508	1-801-806-11	TRANSISTOR	DTC144EKA
	Q4509	1-801-806-11	TRANSISTOR	DTC144EKA
	Q4510	8-729-027-23	TRANSISTOR	DTA114EKA-T146
	Q4511	8-729-027-23	TRANSISTOR	DTA114EKA-T146

H2 H1

REF. NO.	PART NO.	DESCRIPTION	VALUES		
	RESISTOR				
R4502	1-216-813-11	METAL CHIP	220	5%	1/10W
R4506	1-216-833-11	METAL CHIP	10K	5%	1/10W
R4509	1-216-813-11	METAL CHIP	220	5%	1/10W
R4512	1-216-813-11	METAL CHIP	220	5%	1/10W
R4513	1-216-833-11	METAL CHIP	10K	5%	1/10W
R4514	1-216-864-11	SHORT CHIP			
R4515	1-216-864-11	SHORT CHIP			
R4516	1-216-813-11	METAL CHIP	220	5%	1/10W
R4517	1-216-833-11	METAL CHIP	10K	5%	1/10W
R4518	1-216-833-11	METAL CHIP	10K	5%	1/10W
	SWITCH				
S4501	1-762-196-21	SWITCH, TACTILE			

H1

REF. NO.	PART NO.	DESCRIPTION	VALUES		
*	**A-1054-667-A**	**H1 BOARD, MOUNTED**			
	CAPACITOR				
C171	1-100-597-91	CERAMIC CHIP	0.1µF	10%	25V
	CONNECTOR				
CN171	1-580-057-11	PIN, CONNECTOR (SMD)		4P	
	DIODE				
D171	8-719-069-55	DIODE	UDZSTE-175.6B		
	RESISTOR				
R171	1-218-684-11	METAL CHIP	470	0.50%	1/10W
R172	1-218-688-11	METAL CHIP	680	0.50%	1/10W
R173	1-218-692-11	METAL CHIP	1K	0.50%	1/10W
R174	1-218-700-11	METAL CHIP	2.2K	0.50%	1/10W
	SWITCH				
S171	1-762-196-21	SWITCH, TACTILE			
S172	1-762-196-21	SWITCH, TACTILE			
S173	1-762-196-21	SWITCH, TACTILE			
S174	1-762-196-21	SWITCH, TACTILE			
S175	1-762-196-21	SWITCH, TACTILE			

REF. NO.	PART NO.	DESCRIPTION	VALUES
	VARISTOR		
VD171	1-803-974-21	VARISTOR, CHIP	(1608)
	MISCELLANEOUS		
*	4-098-165-01	CLAMPER	
*	4-662-796-01	CLIP, COACHING	
	1-469-241-11	CORE, FERRITE (RFC-8 BK)	
	4-077-654-01	CUSHION (C)	
	4-097-028-01	CUSHION (D)	
	4-097-029-01	CUSHION (E)	
	4-096-431-01	CUSHION (SP), SHIELD (KDF-42WE655 ONLY)	
*	4-092-421-01	FASTENER (FY)	
	4-035-160-01	PURSE LOCK (S) (DIA. 12)	
*	4-091-379-11	SPACER, ROCKING CARD	
*	4-082-745-01	SPRING (FY)	
	4-078-618-02	TAPE (A), PE (KDF-42WE655 ONLY)	
	4-078-619-01	TAPE (B), PE (KDF-42WE655 ONLY)	
	7-600-004-25	TAPE, ACETATE (NO.5) 25X20M BLK (KDF-42WE655 ONLY)	
	4-084-345-01	(+)P TAPPING SCREW B-O (W)	
	7-685-647-79	SCREW +BVTP 3X10 TYPE2 IT-3	
	7-685-660-79	SCREW +BVTP 4X10 TYPE2 IT-3	
	7-685-663-71	SCREW +BVTP 4X16 TYPE2 IT-3	
	7-621-555-50	SCREW +K 2X8	
	7-685-146-11	SCREW +P 3X8 TYPE2 NON-SLIT (KDF-42WE655 ONLY)	
	7-682-147-09	SCREW +P 3X6	
	7-682-148-09	SCREW +P 3X8	
	7-682-660-09	SCREW +PS 4X6	
	7-685-903-21	SCREW +PTPWH 3X8 (TYPE2)	
	7-681-000-00	SCREW +PWH M2X5	
	4-319-520-11	SCREW, SPECIAL (+PW4X30)	
	4-314-843-02	SCREW, TAPPING, +4X12	
	4-064-929-02	SCREW, TP+TWH 4X25	
	7-623-210-22	SW 4,TYPE 2	

REF. NO.	PART NO.	DESCRIPTION	VALUES
		ACCESSORIES AND PACKING	
*	4-049-155-31	BAG, PROTECTION (KDF-42WE655 ONLY)	
*	4-091-526-21	BAG, PROTECTION (KDF-50WE655 ONLY)	
*	4-095-634-01	BOARD, BOTTOM ** (KDF-50WE655 ONLY)	
*	4-098-862-01	BOARD, TOP ** (KDF-50WE655 ONLY)	
*	4-095-598-02	CUSHION LOWER ** (KDF-42WE655 ONLY)	
*	4-095-636-02	CUSHION LOWER ** (KDF-50WE655 ONLY)	
*	4-103-294-01	CUSHION, LOWER ** (KDF-42WE655 ONLY)	
*	4-103-298-03	CUSHION, LOWER ** (KDF-50WE655 ONLY)	
*	4-095-597-02	CUSHION, UPPER ** (KDF-42WE655 ONLY)	
*	4-095-635-02	CUSHION UPPER ** (KDF-50WE655 ONLY)	
*	4-103-295-01	CUSHION, UPPER ** (KDF-42WE655 ONLY)	
*	4-103-299-01	CUSHION, UPPER ** (KDF-50WE655 ONLY)	
*	2-059-625-01	INDIVIDUAL CARTON ** (KDF-42WE655 ONLY)	
*	2-109-278-01	INDIVIDUAL CARTON ** (KDF-42WE655 ONLY)	
*	2-059-626-01	INDIVIDUAL CARTON ** (KDF-50WE655 ONLY)	
*	2-109-279-01	INDIVIDUAL CARTON ** (KDF-50WE655 ONLY)	
*	4-041-423-01	SHEET, PROTECTION ** (KDF-42WE655 ONLY)	
*	4-041-423-11	SHEET, PROTECTION ** (KDF-42WE655 ONLY)	
*	4-042-463-01	SHEET, PROTECTION ** (KDF-50WE655 ONLY)	
*	4-042-463-21	SHEET, PROTECTION ** (KDF-50WE655 ONLY)	
*	4-095-595-01	TRAY ** (KDF-42WE655 ONLY)	
*	4-103-293-01	TRAY ** (KDF-42WE655 ONLY)	
*	4-095-633-01	TRAY ** (KDF-50WE655 ONLY)	
*	4-103-297-01	TRAY ** (KDF-50WE655 ONLY)	
*	1-417-507-11	POD-HOST CERT, D-CABLE READY	
	2-059-370-12	MANUAL, INSTRUCTION	
	2-059-371-12	GUIDE, QUICK START	
		REMOTE COMMANDER	
	1-478-918-11	REMOTE COMMANDER (RM-Y915)	
	3-072-138-01	BATTERY COVER (FOR RM-Y915)	

** These items are manufactured at different facilities. Either part can be used as a replacement.

Sony Corporation
Sony Technology Center
Technical Services
Service Promotion Department

English
2004IJ74WEB-1
Printed in USA
© 2004.9

SERVICE MANUAL

LA-3 CHASSIS

☛ ***In an effort to reduce the size of this pdf file the tiled schematics are not attached to this Service Manual. To receive a complete set of the tiled schematics for this manual please submit a request to the Service Promotion Department at Service_Promotion@am.sony.com***